Kraftsman
CABINETRY

Product Catalog

kraftsmancabinetry.com
412-506-8688

Kraftsman CABINETRY

Table of Contents

Kitchen Cabinet Styles ..... 1 - 6

Wall Cabinets ..... 7 - 9

Base Cabinets ..... 10 - 12

Utility Cabinets ..... 13 -14

Accessories ..... 15 - 17

Vanity Cabinets ..... 17 -19

Accessories & Panels ..... 20 -21

Fillers & Mouldings ..... 22 -23

Miscellaneous 23

Universal Accessories 24

Product Availability 25-32

Kraftsman CABINETRY

Cabinets For The Pros

Kraftsman Cabinetry are durable, attractive, and offer vast amounts of kitchen design possibilities. They are shipped and delivered quickly from centrally located warehouses. These quality cabinets allow you to offer value-pricing to your customers without sacrificing quality.

Kraftsman Cabinetry Features

1. Face Frame
Solid Wood

2. Door Hinges
DTC 6 Way Adjustable, Soft Close

3. Box Construction
Top, Floor, Sides & Back 1/2" Plywood

4. Shelves
Adjustable 3/4" Plywood

5. Drawer Slides
Undermount, Full Extension, Metal, Soft Close

6. Drawer Box
3/4" Solid Maple, Dovetailed

7. Butt Style Doors
Allows for easier access

412-506-8688 • kraftsmancabinetry.com

Kraftsman CABINETRY

9 Styles to Pick From

Kraftsman Cabinetry offers a variety of kitchen cabinet styles to choose from, providing beauty and convenience. From the timeless Summit White Shaker style to classic West Point Grey cabinets, the collection has something for everyone.

These Prefix Codes Show Item Availability For Each Style In The Following Pages

Summit White Shaker
WS

Hickory Shaker
HS

Summit Platinum Shaker
PS

Aspen White
ASP

West Point Grey
WP

Florence Sage
FS

Modern Black Shaker
MBS

Cambridge Shaker
CS

Winchester Grey
WG

Summit White Shaker • WS

With simple flat panel doors, sturdy construction and clean lines, Summit White Shaker Style Kitchen Cabinets go well with classic, contemporary or modern designs. These shaker doors are composed of HDF to ensure the highest quality finish.

- Wood Species: Painted
- Faceframe: Solid Wood
- Door Type: Shaker Style [HDF Construction]
- Cabinet Box: 1/2" Plywood
- Drawer Glide: Undermount Soft Close
- Drawer Head: 5-piece Matching Profile
- Drawer Box: 3/4" Solid Wood Dovetail
- Shelves: 3/4" Adjustable Plywood Shelves
- Door Hinges: Soft Close 6-Way Adjustable Concealed
- Interior/Exterior: Matching White Shaker
- Full Overlay Design

Hickory Shaker • HS

Hickory Shaker kitchens feature strong grain patterns, color changes, knots and swirled grains formed to the simplicity of the Shaker style. This rustic look is ideal for portraying an old world vibe.

- Wood Species: American Hickory
- Face Frame: Solid Wood
- Door Type: Solid Hickory Shaker Style
- Cabinet Box: 1/2" Plywood
- Drawer Glide: Undermount Soft Close
- Drawer Head: Solid Slab
- Drawer Box: 3/4" Solid Wood Dovetail
- Shelves: 3/4" Adjustable Plywood Shelves
- Door Hinges: Soft Close 6-Way Adjustable Concealed
- Cabinet Interior/Exterior: Natural Birch
- Full Overlay Design

***FOR HICKORY SHAKER AND WINCHESTER GREY: Exposed ends require skins to give finished appearance.

Summit Platinum Shaker • PS

Summit Platinum Shaker Cabinets boast a simple shaker design with a classic steel-grey paint.

- Wood Species: Painted
- Face Frame: Solid Wood
- Door Type: Shaker Style [HDF Construction]
- Box Construction: 1/2" Plywood
- Drawer Glide: Undermount Soft Close
- Drawer Head: 5-piece Matching Profile
- Drawer Box: 3/4" Solid Wood Dovetail
- Shelves: 3/4" Adjustable Plywood Shelves
- Door Hinges: Soft Close 6-Way Adjustable Concealed
- Interior/Exterior: Matching Platinum Shaker
- Full Overlay Design

West Point Grey • WP

A flat panel door with a decorative edge profile West Point Grey Cabinets are a clean, trendy option that warms any space.

- Wood Species: Solid Maple / Birch
- Face Frame: Solid Wood
- Door Type: Flat Panel w/ Decorative Edge
- Box Construction: 1/2" Plywood
- Drawer Glide: Undermount Soft Close
- Drawer Head: 5-piece Matching Profile
- Drawer Box: 3/4" Solid Wood Dovetail
- Shelves: 3/4" Adjustable Plywood Shelves
- Door Hinges: Soft Close 6-Way Adjustable Concealed
- Interior/Exterior: Matching West Point Grey
- Full Overlay Design

Aspen White • ASP

With a clean raised center panel design, our Aspen White collection is ideal for creating an exquisite modern look.

- Wood Species: Painted
- Face Frame: Solid Wood
- Door Type: Raised Panel [HDF Construction]
- Box Construction: 1/2" Plywood
- Drawer Glide: Undermount Soft Close
- Drawer Head: 5-piece Matching Profile
- Drawer Box: 3/4" Solid Wood Dovetail
- Shelves: 3/4" Adjustable Plywood Shelves
- Door Hinges: Soft Close 6-Way Adjustable Concealed
- Interior/Exterior: Matching Aspen White
- Full Overlay Design

Winchester Grey • WG

Winchester Grey Cabinets are a clean, trendy option that warms any space. With a flat panel door design and decorative edge, Winchester Grey's soft undertones reflect natural wood grains to give a contemporary feel.

- Wood Species: Solid Maple / Birch
- Face Frame: Solid Wood
- Door Type: Flat Panel w/ Decorative Edge
- Box Construction: 1/2" Plywood
- Drawer Glide: Undermount Soft Close
- Drawer Head: 5-piece Matching Profile
- Drawer Box: 3/4" Solid Wood Dovetail
- Shelves: 3/4" Adjustable Plywood Shelves
- Door Hinges: Soft Close 6-Way Adjustable Concealed
- Cabinet Exterior/Interior: Natural Birch
- Full Overlay Design

***FOR HICKORY SHAKER AND WINCHESTER GREY: Exposed ends require skins to give finished appearance.

Florence Sage • FS

The Florence Sage style features a light, muted green finish that exudes a sense of tranquility and modernity. The flat-panel doors and subtle detailing, creating a stylish and inviting atmosphere for a modern kitchen setting.

- Wood Species: Solid Maple / Birch
- Face Frame: Solid Wood
- Door Type: Shaker Style (HDF Construction)
- Cabinet Box Construction: 1/2 inch Solid Plywood
- Drawer Glide: Undermount Soft Close Drawers
- Drawer Head: 5-piece, Matches Door Profile
- Drawer Box: 3/4 inch Solid Wood Dovetail
- Shelves: 3/4 inch Adjustable Shelves
- Door Hinges: Soft Close 6 Way Adjustable Concealed
- Interior/Exterior: Matching Florence Sage

Modern Black Shaker • MBS

The deep black finish, combined with the classic Shaker design creates a bold and timeless aesthetic. This style effortlessly blends modern elegance with a traditional silhouette, making it a striking choice for those seeking a sleek and impactful kitchen design.

- Wood Species: Solid Maple / Birch
- Face Frame: Solid Wood
- Door Type: Shaker Style (HDF Construction)
- Cabinet Box Construction: 1/2 inch Solid Plywood
- Drawer Glide: Undermount Soft Close Drawers
- Drawer Head: 5-piece, Matches Door Profile
- Drawer Box: 3/4 inch Solid Wood Dovetail
- Shelves: 3/4 inch Adjustable Shelves
- Door Hinges: Soft Close 6 Way Adjustable Concealed
- Interior/Exterior: Natural Birch/ Matching Black

The Cambridge Shaker style has recessed panel door, creating a versatile and sophisticated aesthetic. With a warm and inviting finish, this style brings a sense of traditional craftsmanship your kitchen space.

- Wood Species: Solid Maple / Birch
- Face Frame: Solid Wood
- Door Type: Flat Panel w/Decorative Edge
- Cabinet Box Construction: 1/2 inch Solid Plywood
- Drawer Glide: Undermount Soft Close Drawers
- Drawer Head: 5-piece, Matches Door Profile
- Drawer Box: 3/4 inch Solid Wood Dovetail
- Shelves: 3/4 inch Adjustable Shelves
- Door Hinges: Soft Close 6 Way Adjustable Concealed
- Interior/Exterior: Matching Cambridge Shaker

Single Door **Wall**

1 Door Wall Cabinets	
W0930	9 x 30
W0936	9 x 36
W0942	9 x 42
W1230	12 x 30
W1236	12 x 36
W1242	12 x 42
W1530	15 x 30
W1536	15 x 36
W1542	15 x 42
W1830	18 x 30
W1836	18 x 36
W1842	18 x 42
W2130	21 x 30
W2136	21 x 36
W2142	21 x 42

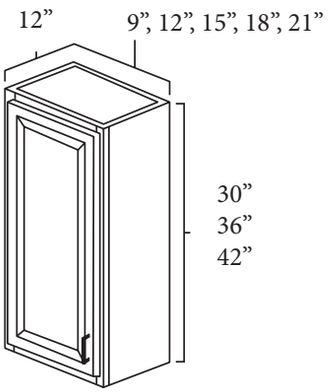

Specifications:

- 30” and 36” wall cabinets have two adjustable shelves.
- 42” tall cabinets have three adjustable shelves.
- Doors may be replaced with corresponding glass doors
- Availability pg. 25

Refrigerator **Wall**

Refrigerator Wall Cabinets	
WR3315	33 x 15
WR3324	33 x 24
WR3612	36 x 12
WR3615	36 x 15
WR3618	36 x 18
WR3621	36 x 21
WR3624	36 x 24

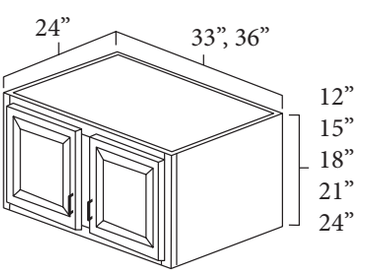

Specifications:

- 24” tall cabinets have one adjustable shelf.
- 33” wide cabinets are available only in 15” and 24” height.
- Butt doors are standard.
- Availability pg. 27

Double Door **Wall**

2 Door Wall Cabinets	
W2430	24 x 30
W2436	24 x 36
W2442	24 x 42
W2730	27 x 30
W2736	27 x 36
W2742	27 x 42
W3030	30 x 30
W3036	30 x 36
W3042	30 x 42
W3330	33 x 30
W3336	33 x 36
W3342	33 x 42
W3630	36 x 30
W3636	36 x 36
W3642	36 x 42
W3930	39 x 30
W3936	39 x 36
W3942	39 x 42
W4230	42 x 30
W4236	42 x 36
W4242	42 x 42

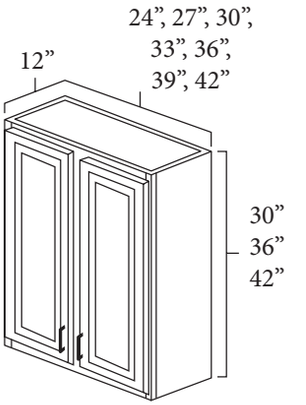

Specifications:

- 30” and 36” wall cabinets have two adjustable shelves.
- 42” tall cabinets have three adjustable shelves.
- Butt doors on cabinets 24”- 36” wide.
- Doors may be replaced with corresponding set of double glass doors (see page 15).
- Availability pg. 25, 26

Spice Drawers **Wall**

Spice Drawer Wall Cab	
WSC30	6 x 30

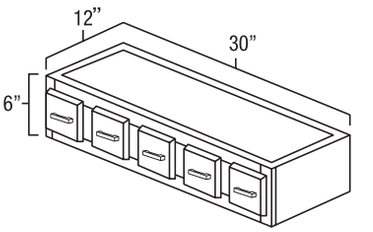

Specifications:

- Finished Interior.
- Can be used without the drawers as a wine rack.
- Can be installed vertically.
- Availability pg. 27

Bridge **Wall**

Bridge Wall Cabinets	
W3012	30 x 12
W3312	33 x 12
W3612	36 x 12
W3015	30 x 15
W3315	33 x 15
W3615	36 x 15
W3018	30 x 18
W3318	33 x 18
W3618	36 x 18
W3021	30 x 21
W3321	33 x 21
W3621	36 x 21
W3024	30 x 24
W3324	33 x 24
W3624	36 x 24

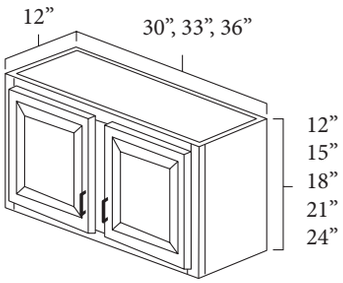

Specifications:

- 24″ tall have 1 adjustable shelf.
- The remaining heights have no shelves.
- Availability pg. 26

Diagonal Corner **Wall**

Diagonal Corner Wall Cabinets	
WDC2430	24x30
WDC2436	24x36
WDC2442	24x42

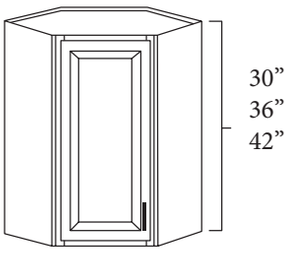

Specifications:

- 30″ and 36″ tall have 2 adjustable shelves.
- 42″ tall have 3 adjustable shelves.
- Door may be replaced with corresponding diagonal glass door (see page 17).
- Availability pg. 27

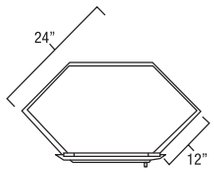

Oven Stacker **Wall**

Diagonal Stacker Wall	
DDSWOC3312	33″ x 12″

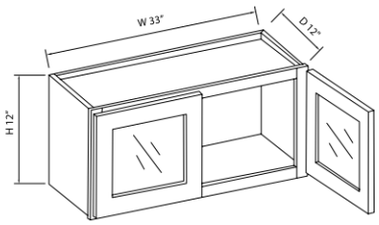

- Availability pg. 29

Single Decorative Stacker **Wall (with plain glass)**

Single Dec Stacker	
W1212PG	12x12
W1512PG	15x12
W1812PG	18x12
W2112PG	21x12

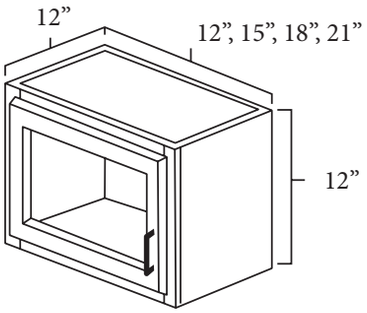

Note:

- STACKER CABINETS DO NOT LINE UP WITH THE DOORS WHEN STACKING ON THE **UOC** CABINET
- Availability pg. 25

Double Decorative Stacker **Wall (with plain glass)**

Double Dec Stacker	
W2412PG	24x12
W2712PG	27x12
W3012PG	30x12
W3312PG	33x12
W3612PG	36x12

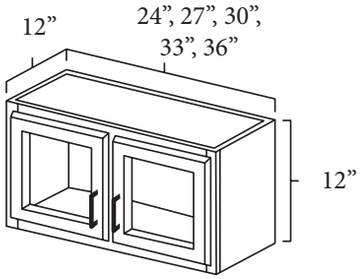

- Availability pg. 26

Easy Reach **Wall***

Wall Easy Reach	
WER2430	24x30
WER2436	24x36
WER2442	24x42

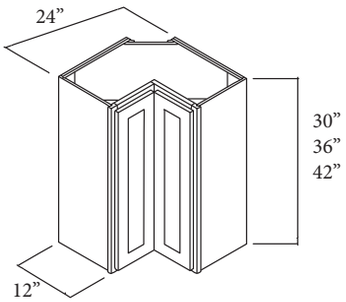

*Not Available in Aspen White

- Availability pg. 27

Single Door **Wall**

18″ High Single Door	
W1218	12x12x18
W1518	15x12x18
W1818	18x12x18

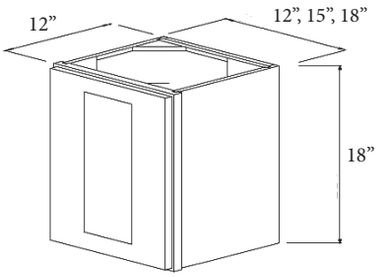

- Availability pg. 25

Microwave **Wall**

Microwave Wall Cab	
MW3030	30x30
MW3036	30x36
MW3042	30x42

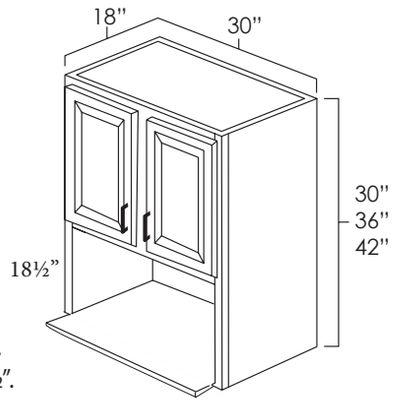

Specifications:

- For “counter” style microwaves.
- Opening width is 26-7/8” x 18-1/2”.
- Butt doors on all sizes.
- Availability pg. 25

3 Drawer **Wall***

Wall 3 Drawer	
W3DR18	18″
W3DR24	24″

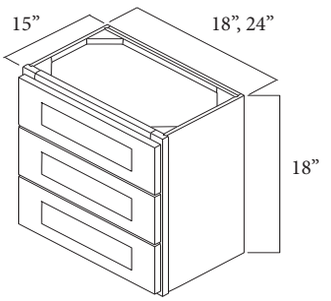

- Availability pg. 25

*Not Available in Aspen White

Angled End **Wall**

Angled End Wall Cab	
WCA1230	12x30
WCA1236	12x36
WCA1242	12x42

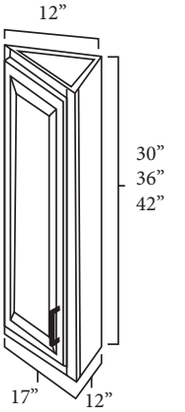

Specifications:

- 30″ and 36″ wall cabinets have two adjustable shelves.
- 42″ wall cabinets have three adjustable shelves.
- Availability pg. 27

Blind Corner **Wall**

Blind Corner Wall Cabinets	
WBC2730	27x30
WBC2736	27x36
WBC2742	27x42

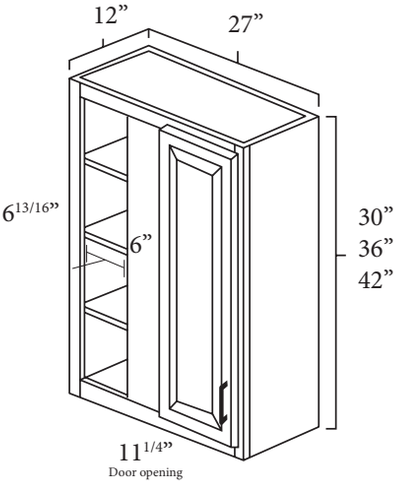

Specifications:

- 30″ and 36″ tall have 2 adjustable shelves.
- 42″ tall have 3 adjustable shelves.
- Can be pulled to a max of 3″ to make it cover 30″
- 6 13/16″ blind opening
- 13 3/4″ door width
- Availability pg. 27

Diagonal Stacker **Wall**

Diagonal Stacker Wall	
DDSWDC2412	24″ x 12″

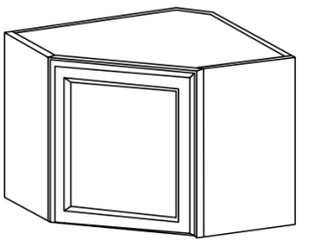

- Availability pg. 29

Single Drawer & Door **Base**

Single Drawer & Door	
B12	12″
B15	15″
B18	18″
B21	21″

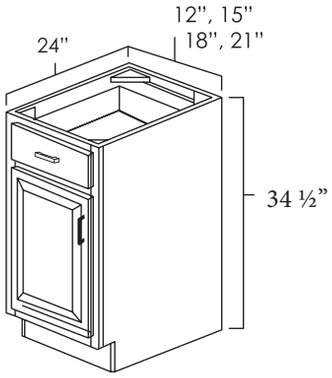

Specifications:

- ½ depth adjustable shelf.
- Availability pg. 27

Double Drawers & Doors **Base**

Double Drawer & Door	
B30	30″
B33	33″
B36	36″
B39	39″
B42	42″
B48	48″

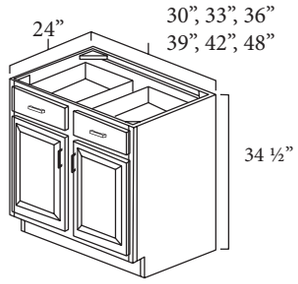

Specifications:

- ½ depth adjustable shelf.
- Butt doors on 30″ through 36″ wide bases.
- Availability pg. 27

Double Doors & Single Drawer **Base**

Double Drawer Single Door	
B24	24″
B27	27″

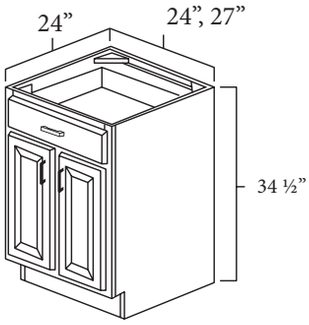

Specifications:

- ½ depth adjustable shelf.
- Butt doors on both 24″ and 27″ wide bases.
- Availability pg. 27

Drawer **Base**

Drawer Base Cabinets	
DB12	12″
DB15	15″
DB18	18″
DB21	21″
DB24	24″
DB30	30″
DB36	36″

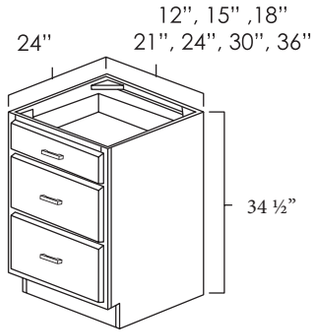

Specifications:

- One standard drawer on top and two deep drawers below.
- Availability pg. 28

Corner Drawer **Base**

Corner Drawer Base	
CDB36	36″

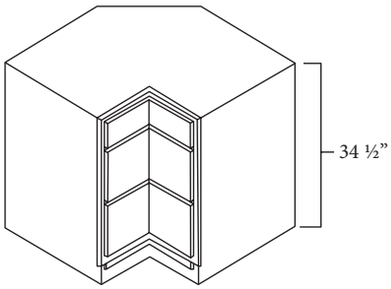

Specifications:

- This cabinet has three fully functioning, full extension drawers.
- One standard drawer on top and two deep drawers below.
- Availability pg. 28

Sink Base

Sink Base Cabinet	
SB33	33″
SB36	36″

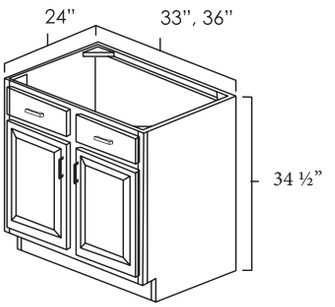

Specifications:

- For additional sizes use Standard Base cabinet (page 8).
- For additional sizes specify to be used as a Sink Base.
- Availability pg. 28

Farm Sink Base

Farm Sink Base	
FSB36	36″

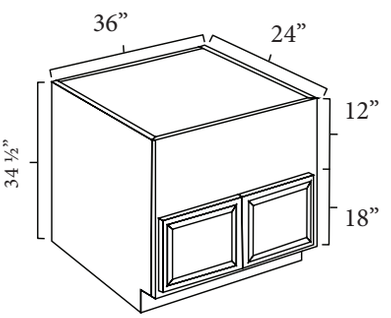

Specifications:

- 18″ high cabinet doors.
- There are no shelves or drawers.
- Availability pg. 28

Easy Reach Base*

Easy Reach Base Cabinet	
BER33	33"
BER36	36″

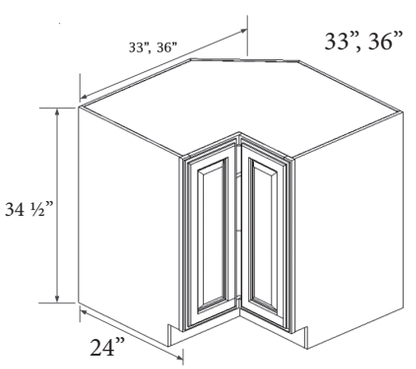

- Availability pg. 27

*Not Available in Aspen White

2 Drawer Base*

2 Drawer Base Cabinets	
2DB24	24″
2DB27	27″
2DB30	30″
2DB33	33″
2DB36	36″

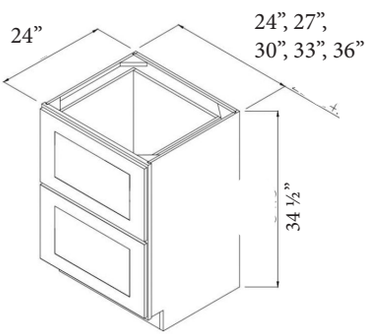

- Availability pg. 28

*Not Available in Aspen White

Diagonal Corner Sink Base

Diagonal Corner Sink	
DCSB36	36″

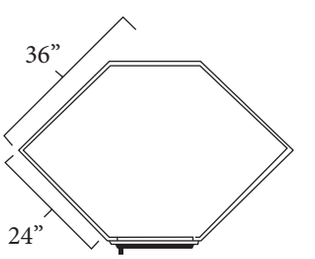

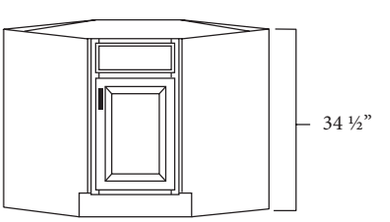

Specifications:

- There are no shelves or drawers in this cabinet.
- Availability pg. 28

Angled End **Base**

Angled End Base	
BA24	24″

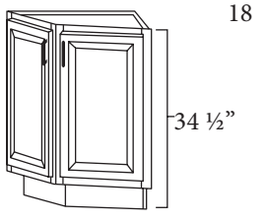

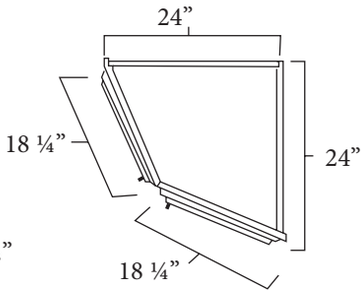

Specifications:

- One adjustable shelf.
- Availability pg. 28

Microwave **Base**

Microwave Base	
BMC27	27″
BMC30	30″

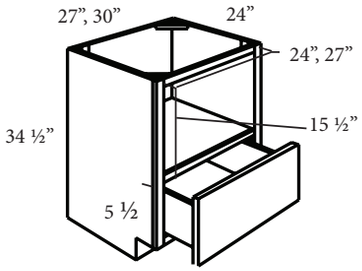

Specifications:

- 1 Soft-close drawer.
- Availability pg. 28

Full Height Single Door **Base**

Full Height Base	
FHB9	9″
FHB12	12″
FHB15	15″
FHB18	18″
FHB21	21″

- Availability pg. 31

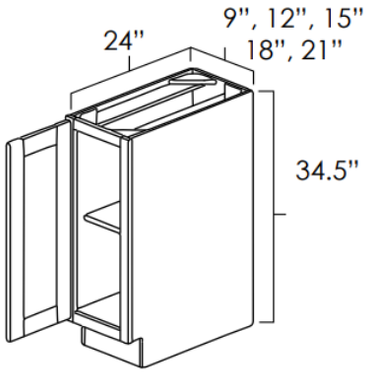

Full Height Double Door **Base**

Full Height Base	
FHB24	24″
FHB27	27″
FHB30	30″
FHB33	33″
FHB36	36″
FHB39	39″
FHB42	42″
FHB48	48″

- Availability pg. 31

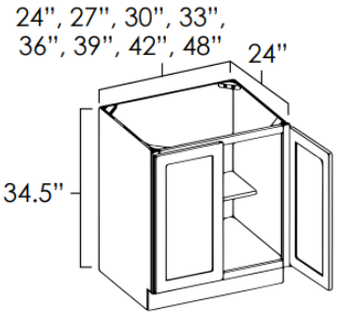

Blind Corner **Base**

Blind Corner Base						
	Width	Door Opening	Center Stile	Full Door Width	Pull Min.	Pull Max.
BBC36	36″	12″	9″	14 9/16″	3″	9″

Specifications:

- Cannot pull farther than 6″.
- 14 9/16″ door overlay.
- Used as a right (R) or left (L) blind.
- Must be pulled a minimum of 3″.
- Availability pg. 28

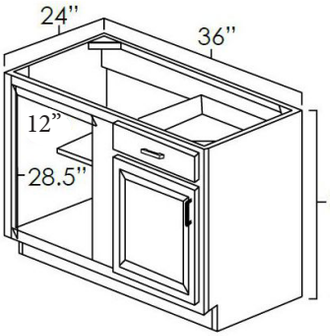

Lazy Susan Corner **Base**

Lazy Susan Corner	
LS3312	33″
LS3612	36″

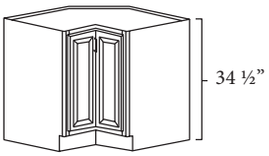

Specifications:

- Two stainless steel, height adjustable baskets are standard.
- Doors may be mounted to open right or left.

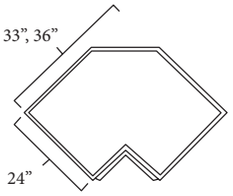

Spice Rack Base*

Base Spice Rack	
BSR9	9"
BSR12	12"

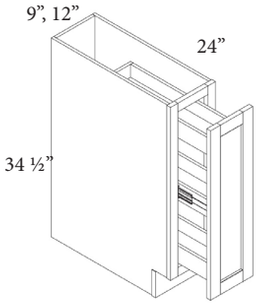

Specifications:
- Pull out spice rack
- Availability pg. 28

*Not Available in Aspen White

Spice Drawer Base

Spice Drawer Base	
BSD6	6"

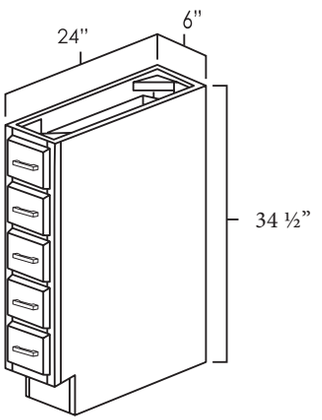

Specifications:
- This cabinet does not come with drawer slides.
- The cabinet can be used without the drawers as a wine rack.
- Availability pg. 28

Full Height/Tray Base

Full Height Tray Base	
TB09	9"

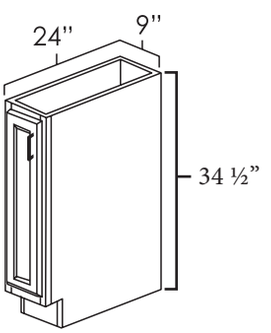

Specifications:
- There are no shelves in this cabinet or top drawer.
- Good for trays & cookie sheets.
- Availability pg. 28

18" Wide Utility

18" Wide Utility	
UC1884	18x84
UC1890	18x90
UC1896	18x96

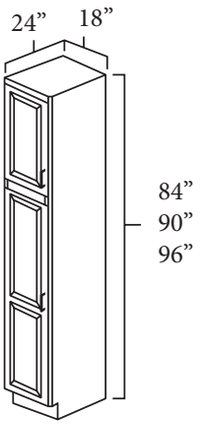

Specifications:
- Includes 4 adjustable shelves.
- Bottom section is 54" tall.
- Toe kick attached to all heights.
- For Roll Out Tray accessories see page 13.
- Availability pg. 29

Universal Oven Utility

Universal Oven Cab	
UOC3384	33x84
UOC3390	33x90
UOC3396	33x96

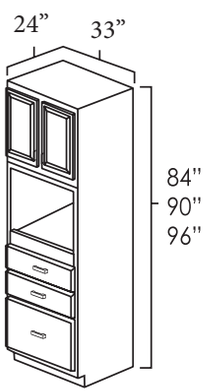

Specifications:
- The cut out opening measures 28 ½" x 22".
- Can be arranged as a single oven, double oven, or oven/microwave combination by removing the necessary drawers.
- Availability pg. 28

24" Utility

24" Wide Utility	
UC2484	24x84
UC2490	24x90
UC2496	24x96

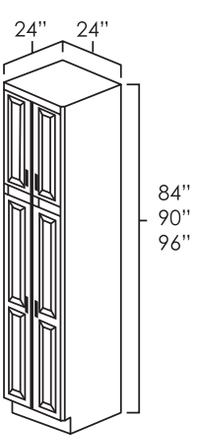

Specifications:
- For Roll Out Tray accessories see page 13.
- Availability pg. 28

Split Pantry Wall Utility*

Pantry Wall	
W183024	18 x 30
W183624	18 x 36
W184224	18 x 42
W243024	24 x 30
W243624	24 x 36
W244224	24 x 42
W303024	30w x 30
W303624	30 x 36
W304224	30 x 42
W363024	36 x 30
W363624	36 x 36
W364224	36 x 42

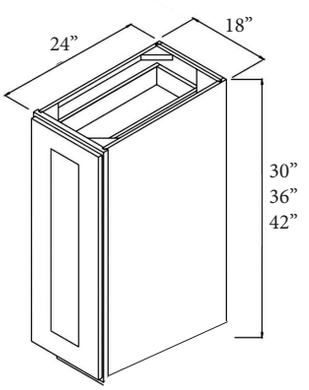

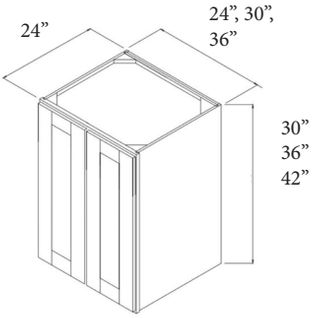

Specifications:

- Both Wall and Base 18” Split Pantries are single door.
- All other sizes are double door.
- Availability pg. 26

NOTE:

- Top door overlay does not match base cabinet when using as a base.

*Not Available in Aspen White

Split Pantry Base Utility*

Pantry Base	
UCB1854	18 x 54
UCB2454	24 x 54
UCB3054	30 x 54
UCB3654	36 x 54

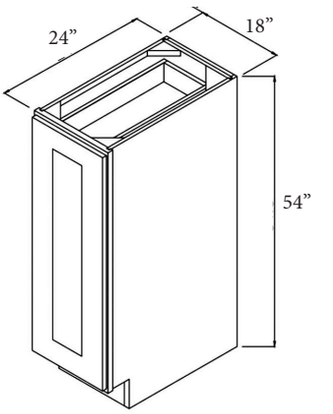

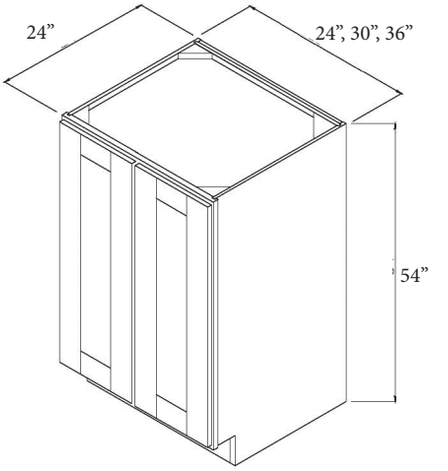

- Availability pg. 26

*Not Available in Aspen White

Lattice Wine Rack Accessories

Lattice Wine Rack	
LWR3015	30x15

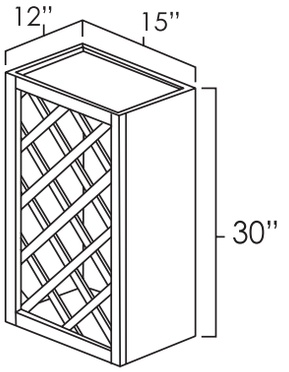

Specifications:

- Holds 11 bottles.
- Can install horizontally or vertically.
- Will hold 3-¾" diameter bottles.
- Availability pg. 28

Stem Glass Holders Accessories

Stem Glass Holder	
SGH	12x30

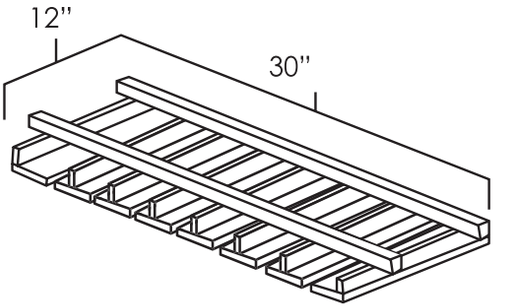

Specifications:

- Solid wood.
- Mounts to bottom of wall cabinet.
- Can be cut to fit smaller cabinets.
- Fitted to mount under any 30" wide standard, stacker, or bridge wall cabinet.
- Holds 6 rows of glasses (18 standard size wine glasses)
- Availability pg. 30

Roll Out Trays Accessories

Roll Out Trays	
ROT15	15"
ROT18	18"
ROT21	21"
ROT24	24"
ROT27	27"
ROT30	30"
ROT33	33"
ROT36	36"

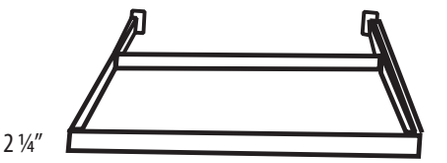

Specifications:.

- Drawer glide hardware and wood finish are natural
- May be used in any 24" deep cabinet (Base, Refrigerator Wall, Pantries).
- Undermount Drawer Glides, softclose.
- Depth is 1 ⅜"
- Availability pg. 30

Arched Valance Accessories

Arched Valances	
VA48	48"

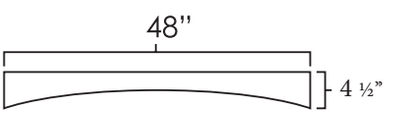

Specifications:

- Can be trimmed down to needed size.
- Availability pg. 30

Finished Floating Shelf Accessories*

Finished Floating Shelf	
FFS24	24"
FFS30	30"
FFS36	36"
FFS42	42"

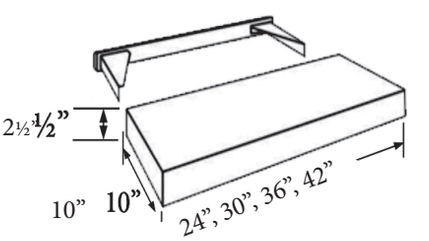

- Availability pg. 28

*Not Available in Aspen White

Knee Drawer Accessories

Under Counter Knee Drawer	
UCD30	30″
UCD36	36″

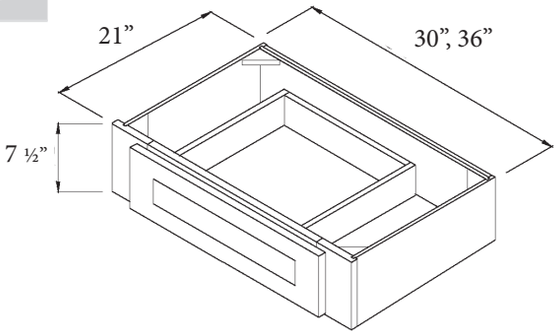

Specifications:

- Drawer unit designed to be installed under counter to create a desk area.
- Drawers can be installed beside either vanity cabinets (21″ depth) or standard base cabinets (24″ depth).
- Availability pg. 30

Corbels Accessories

Corbels	
CBLPN2	Small
CBLPN3	Large

Small
Width: 4 ¾″
Depth: 5″
Height: 9 ½″

Large
Width: 6¼″
Depth: 6 ½″
Height: 13¼″

Specifications:

- Available in 2 size options
- Availability pg. 29

Plate Rack Accessories

Plate Rack	
PR3015	30x15

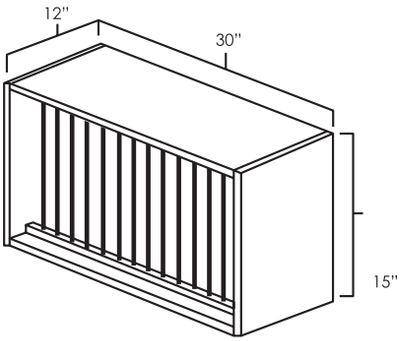

Specifications:

- Can hold 10 plates.
- Plate rack may also be used with wall cabinets.
- Availability pg. 30

Wine Storage Cube Accessories*

Wine Storage Cube	
WSC1515	15″
WSC1818	18″

- Availability pg. 28

*Not Available in Aspen White

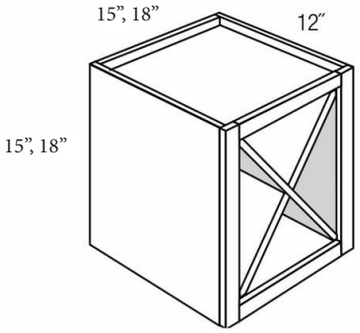

Single Glass Doors Accessories**

Mullion Single Glass Door	
MD1530	15 x 30
MD1830	18 x 30
MD2130	21 x 30
MD1536	15 x 36
MD1836	18 x 36
MD2136	21 x 36
MD1542	15 x 42
MD1842	18 x 36
MD2142	21 x 42
MDWDC30	30"
MDWDC36	36"
MDWDC42	42"

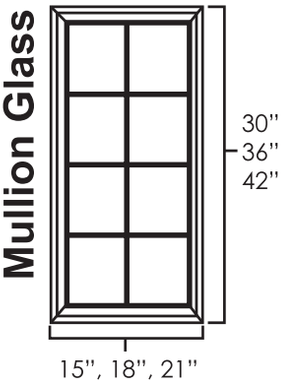

Specifications:

- The information following MD in the sku indicate the size / type of cabinet the door will fit.
  EX: MD2442 fits a W2442.
  EX: MDWDC36 fits a WDC2436.
- 30" and 36" high cabinets will have 6 panes while 42" high cabinets have 8.
- Availability pg. 29

**Not Available in Aspen White, Hickory, West Point Grey, or Winchester Grey

Double Glass Doors Accessories**

Mullion Glass Door	
MD2430	24"x30"
MD2436	24"x36"
MD2442	24"x42"
MD3030	30"x30"
MD3036	30"x36"
MD3042	30"x42"
MD3630	36"x30"
MD3636	36"x36"
MD3642	36"x42"

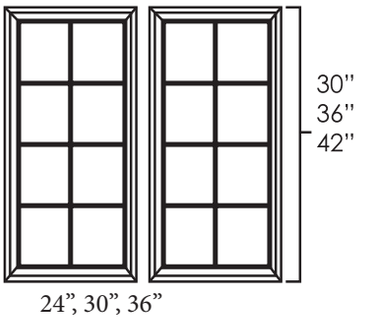

Specifications:

- 30" and 36" high cabinets have 6 panes, 42" high cabinets have 8.
- Come in set of 2
- Availability pg. 29

**Not Available in Aspen White, Hickory, West Point Grey, or Winchester Grey

Plain Glass Doors Accessories*

Set Plain Double Glass	
PG2430	24x30
PG2436	24x36
PG2442	24x42
PG3030	30x30
PG3036	30x36
PG3042	30x42
PG3630	36x30
PG3636	36x36
PG3642	36x42

Plain Glass Door	
PG1530	15x30
PG1536	15x36
PG1542	15x42
PG1830	18x30
PG1836	18x36
PG1842	18x42
PG2130	21x30
PG2136	21x36
PG2142	21x42

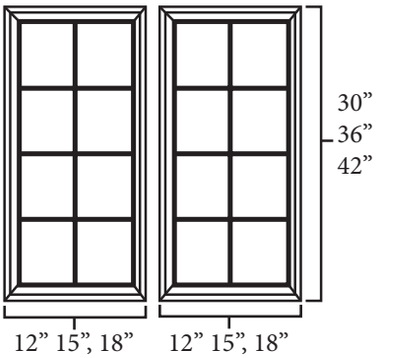

Specifications:

- The information following in the sku indicate the size / type of cabinet the door will fit.
  EX: PG2442 fits a W2442.
- Single cabinet doors from PG1530 to PG2142
- PG2430 to PG3642 are double sets of cabinet doors
- Availability pg. 30

*Not Available in Aspen White

Single Glass Diagonal Doors Mullion & Plain Accessories**

Single Glass Diagonal	
PGWDC30	30"
PGWDC36	36"
PGWDC42	42"

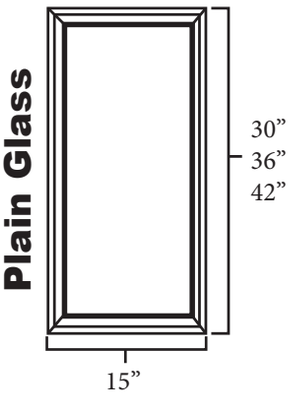

Specifications:

- Fits WDC cabinet 30, 36, 42 heights
- Availability pg. 30

Appliance Garage **Accessories**

Appliance Garage	
AG2418	24 x 18

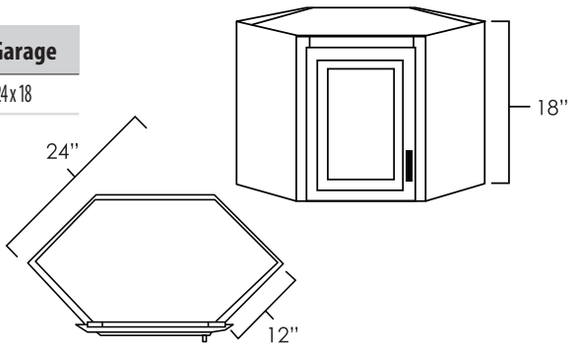

Specifications:

- Designed for installation on countertop.
- Fits directly below a wall diagonal corner cabinet.
- There are no shelves.
- Availability pg. 29

Toilet Topper **Accessories***

Toilet Topper	
TT2436	24 x 36

- Availability pg. 28

*Not Available in Aspen White

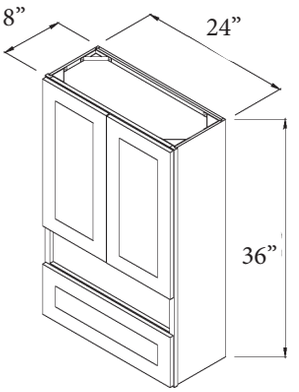

Drawer Base **Vanity**

Vanity Drawer Base	
VDB1221	12″
VDB1521	15″
VDB1821	18″
VDB2121	21″
VDB2421	24″

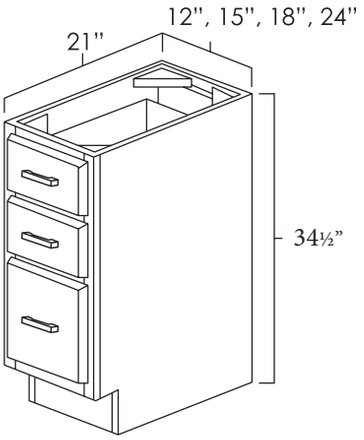

Specifications:

- Depth: 21″.
- All styles have one standard drawer on top and two drawers below.
- All three drawers are fully functioning.
- Availability pg. 32

Sink Base **Vanity**

Sink Base Vanity	
V2121	21 x 21
V2421	24 x 21
V2721	27 x 21
V3021	30 x 21
V3621	36 x 21

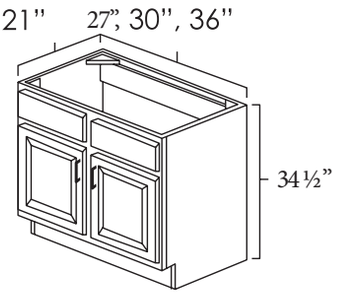

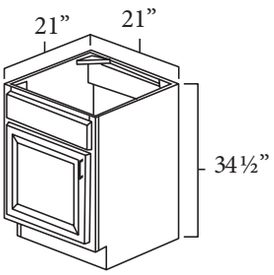

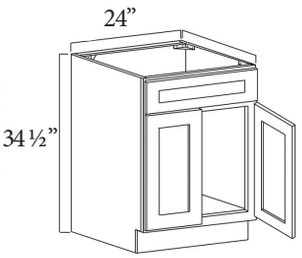

Specifications:

- There are no shelves or drawers in these cabinets
- Availability pg. 32

Base Vanity*

Vanity Base	
VB12	12″
VB15	15″
VB18	18″

- Availability pg. 32

*Not Available in Aspen White

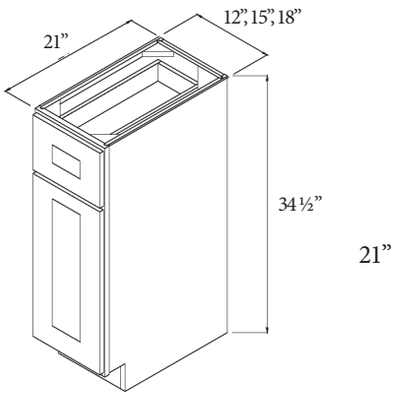

Double Sink Vanity

Double Sink Vanity	
VSDB60	60 x 21

- Availability pg. 32

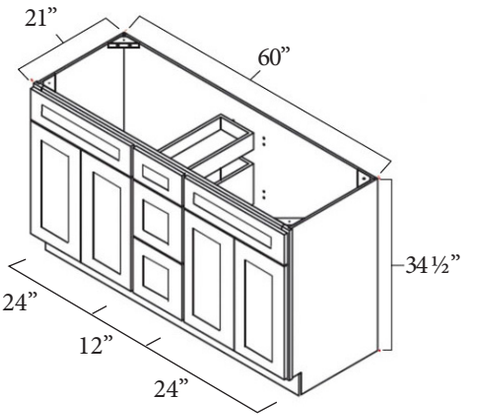

Single Door Vanity

Single Door Vanity	
V3021DL	30 x 21
V3021DR	30 x 21
V3621DL	36 x 21
V3621DR	36 x 21
V4221DL	42 x 21
V4221DR	42 x 21

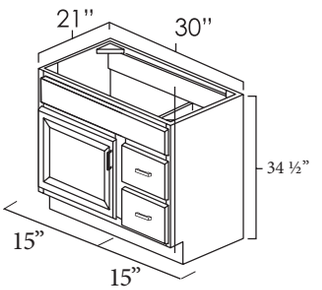

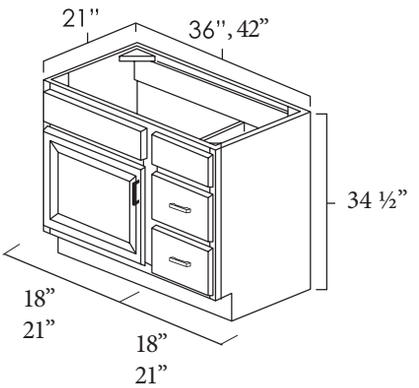

Specifications:

- Depth: 21″.
- There are no shelves in these cabinets.
- Only the bottom two drawers are functioning.
- All styles have one standard false drawer front on top and two deep drawers below.
- WHEN INDICATING RIGHT (R) or LEFT (L), IT CORRESPONDS TO THE SIDE THE DRAWERS ARE ON WHILE LOOKING AT IT
- Availability pg. 32

Double Door Vanity

Double Door Vanity	
V4821DD	48 x 21
V6021DD	60 x 21

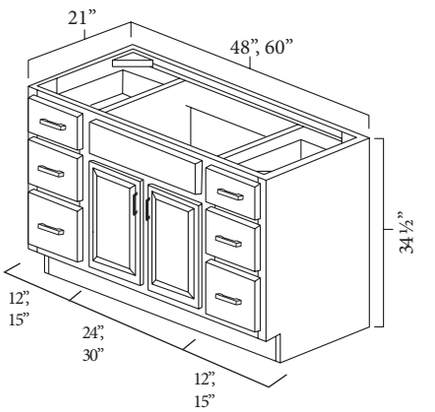

Specifications:

- Depth: 21″.
- There are no shelves.
- All styles have two standard drawers on top and four deep drawers below.
- Butt doors on both vanity combinations.
- Availability pg. 29

Matching End Panel Vanity

Vanity Base	
MVEPBH	30x20

- Availability pg. 31

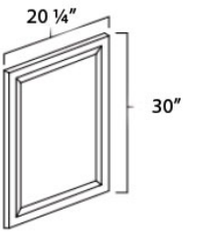

Wall End Panels

Wall End Panels	
WEP1542	15 x 42

Specifications:

- ½" thick panel with a 3" wide wall filler on the front.
- Can be trimmed to desired height and/or width.
- May be used left or right.
- Availability pg. 31

Refrigerator End Panels

Refrigerator End Panels	
REP9624	96 x 24

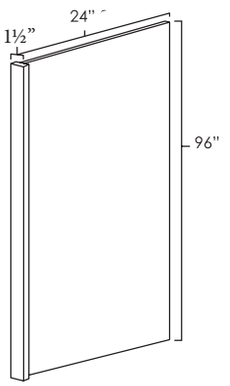

Specifications:

- 1/2" thick panel 1 1/2" filler.
- Trimmed to height/width.
- May be used left or right.
- Availability pg. 31

Matching Tall End Panels

Matching Tall End Panels	
MTEP84	23 ¼ x 84
MTEP90	23 ¼ x 90
MTEP96	23 ¼ x 96

- Availability pg. 31

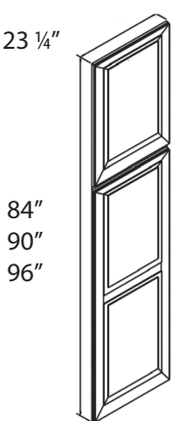

Bead Board Panels*

Bead Board Panels	
BBFBP4896	48 x 96

- Availability pg. 31

*Not Available in Aspen White

Base Veneer Skin & End Panels**

Base End & Veneer Skin	
BS2435	24x34½
BEP3	24x34½

Specifications:

- BEP3 is ½" thick panel with a 3" wide base filler on the front.
- May be used left or right.
- BS2435 is 3/16" thick.
- Availability pg. 31

**Only Available in Platinum, Hickory, & Winchester Grey.

Island Panels

Island Panels	
IS3696	36 x 96

- Availability pg. 31

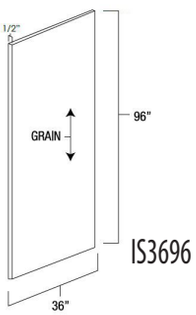

Decorative End Panels

Decorative End Panels	
DP1230	12 x 30
DP1236	12 x 36
DP1242	12 x 42
DP2430	24 x 30

- Availability pg. 31

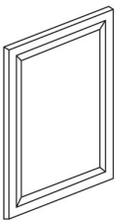

Plywood Edge Banded Panels

Edge Banded Panels	
PLYEB42	42 x 96

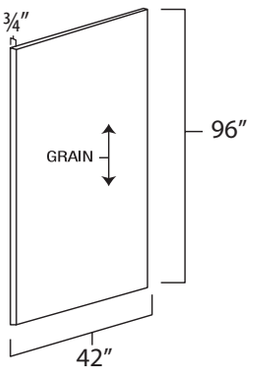

Specifications:

- Can be used as refridgerator end panels.
- Edgebanded
- Availability pg. 31

Base Fillers

Base Fillers	
BF3	3 x 34½
BF6	6 x 34½
TF396	3 x 96

- Availability pg. 31

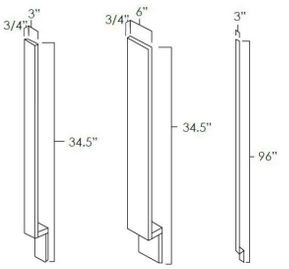

Fluted Base Fillers

Fluted base Fillers	
BFF3	3 x 34½
BFF6	6 x 34 ½

- Availability pg. 31

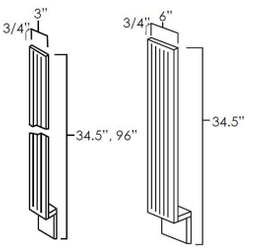

Wall Fillers

Wall Fillers	
WF342	3 x 42
WF642	6 x 42
WF396	3 x 96

- Availability pg. 32

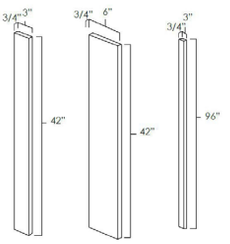

Fluted Wall Fillers*

Fluted Wall Fillers	
WFF342	3 x 42
WFF642	6 x 42
WFF396	3 x 96

- Availability pg. 32

*Not Available in Aspen White

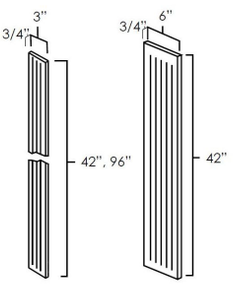

Tall Fillers

Tall Section Filler	
WF696	6 x 96

- Availability pg. 31

Wall Skin*

Wall Skin	
WS1542	15x42

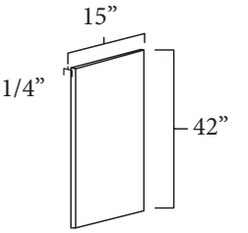

Specifications:

- 1/4" thick.
- Can be trimmed to desired height and/or width.
- Availability pg. 32

*Not Available in Aspen White

Tall Skin*

Tall Skin	
TS2496	23.5x96

- Availability pg. 31

*Only Available in Hickory and Winchester Grey.

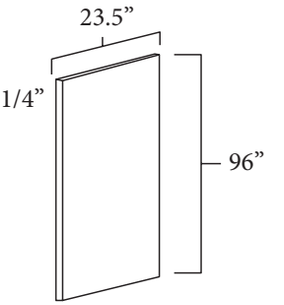

Stained Plywood

Stained Plywood	
SPW	36x96

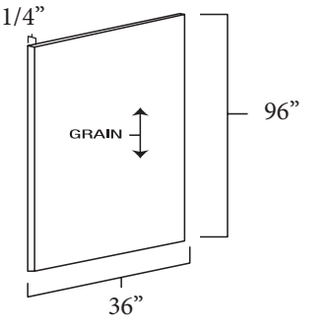

Specifications:

- Sold in 8ft. long sections
- 1/4" thick.
- Availability pg. 31

Toe Kick **Moulding**

Toe Kicks	
TK8	8′

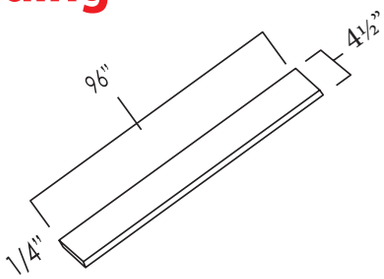

Specifications:

- 1/4″ thick.
- Can be cut to fit.
- Availability pg. 31

Large Cove Crown **Moulding**

Large Cove Crown	
LVC	8′

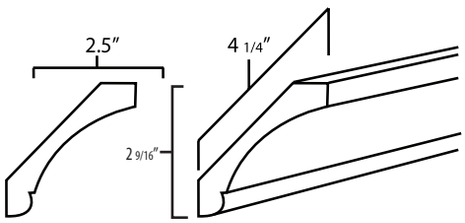

Specifications:

- Sold in 8ft. long sections
- Height: 2-9/16″
- Availability pg. 31

Crown **Moulding**

Crown Moulding	
LCM8	8′

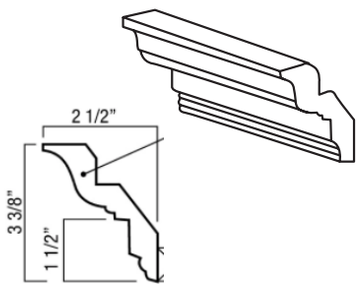

Specifications:

- Sold in 8ft sections.
- Flat section to accommodate Rope insert.
- When applying crown to full overlay cabinets a crown backer required.
- Availability pg. 31

Scribe **Moulding**

Scribe Moulding	
SM8	8′

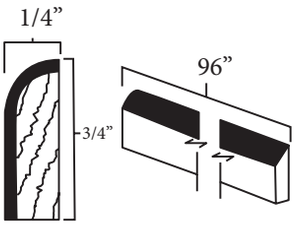

Specifications:

- Sold in 8 ft long sections.
- Use behind Light Rail Molding when wrapping around the side of a wall cabinet.
- Availability pg. 31

Light Rail **Moulding**

Light Rail Moulding	
LRM8	8′

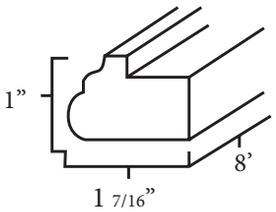

Specifications:

- Sold in 8 ft long sections.
- Availability pg. 31

Outside Corner **Moulding**

Outside Corner	
OCS8	8′

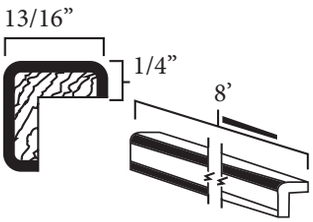

Specifications:

- Sold in 8ft. long sections
- Availability pg. 31

Shoe **Moulding**

Shoe Moulding	
SHM8	8′

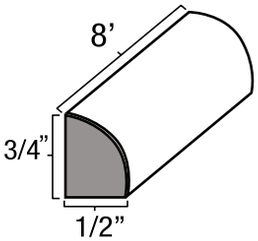

- Availability pg. 31

Batten **Moulding**

Batten Moulding	
BM8	8'

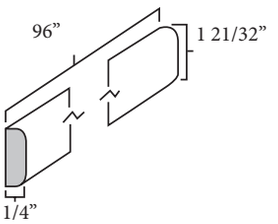

Specifications:
- Sold in 8ft. long sections
- Availability pg. 31

Decorative Base **Moulding**

Dec Base Moulding	
DEC004	8'

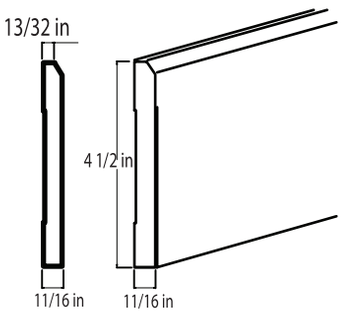

Specifications:
- Sold in 8 ft long sections.
- Availability pg. 31

Rope Insert **Moulding**

Rope Insert Moulding	
ROPE8	8'

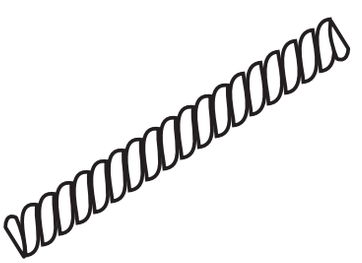

Specifications:
- Sold in 8 ft long sections.
- 9/16th of an inch wide.
- 1/4 inch thick.
- Crown molding insert.
- Availability pg. 31

Touch-Up Kit

Included In Kit:
- One Wax Putty Stick
- One Touch-Up Marker

Display/Sample Doors

Display/Sample Doors	
DD	1 Door
KC-DDSET-9	9-Door Set

Specifications:
- Summit White Shaker
- Summit Platinum Shaker
- Hickory Shaker
- West Point Grey
- Aspen White
- Winchester Grey
- Modern Black Shaker
- Florence Sage
- Cambridge Shaker

Ashley **Range Hood**

Ashley Range Hood	
ASH-FS3042	30x42
ASH-FS3642	36x42

Specifications:
- Availabile in all 9 styles as well as unfinished.

Kelsey **Range Hood**

Ashley Range Hood	
KEL-FS3042	30x42
KEL-FS3642	36x42

Specifications:
- Availabile in all 9 styles as well as unfinished.

Chrome Tray **Divider**

Chrome Tray Divider
RS-CTD18

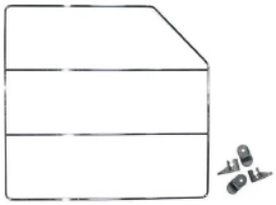

Specifications:

- To use with **TB09** and **WR** Cabinets 21" high and taller.
- Must be field installed

Wood **Lazy Susan**

Wood Lazy Susan
RS-WLS

Specifications:

- **INSERT ONLY** For B**ER33** or **BER36**
- Must include the cost of the BER Cabinet

Wood **Cutlery Divider**

Wood Cutlery Divider
RS-WCD15-18
RS-WCD21-24

Specifications:

- Select either **WCD15-18** or **WCD21** to match the cabinet width for install.

Wood **Super Susan**

Wood Super Susan
RS-WSS

Specifications:

- To be used in the **BER33** or **BER36**
- Sold and priced per shelf

Peg **Drawer Insert**

Peg Drawer Insert
RS-PDS39
RS-PDS24

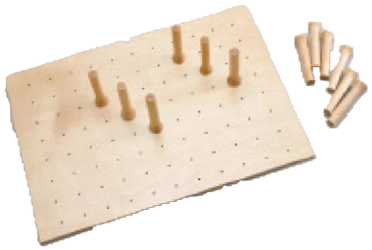

Specifications:

- To use with 2 Drawer Base 24 to 36 wide cabinets
- **Specify the cabinet this will be used in and location of insert**

Trash Can **Pullout**

Trash Can Pullouts	
RWC-TCK-DOUBLE	35QT
RWC-TCK-SINGLE	35QT

Specifications:

- Double 35QT Frame with Slides
- Single 35QT Frame with Slides

Wood **Tiered Cutlery Divider**

Wood Tiered Cutlery Divider
RS-WTCD15
RS-WTCD18
RS-WTCD21
RS-WTCD24

Specifications:

- Select the correct size to correspond with the cabinet width.

Single Drawer & Door ADA Base

Single Drawer & Door	
ADAB12	12″
ADAB15	15″
ADAB18	18″
ADAB21	21″

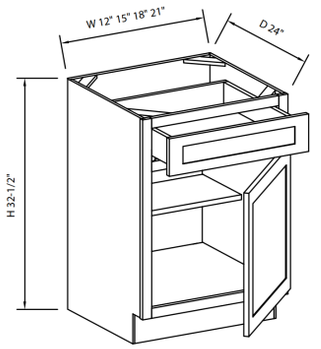

Double Doors & Single Drawer ADA Base

Double Drawer Single Door	
ADAB24	24″
ADAB27	27″

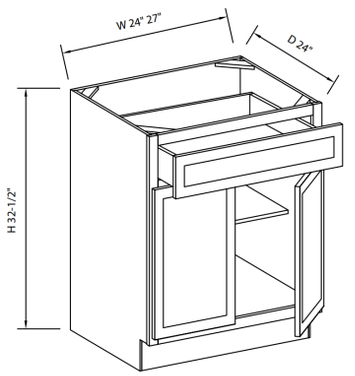

Sink ADA Base

Sink Base Cabinet	
ADAB36	36″

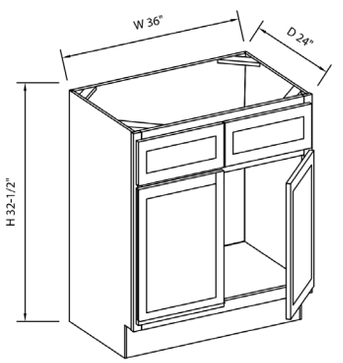

Drawer ADA Base

Drawer Base Cabinets	
ADADB18	18″
ADADB21	21″

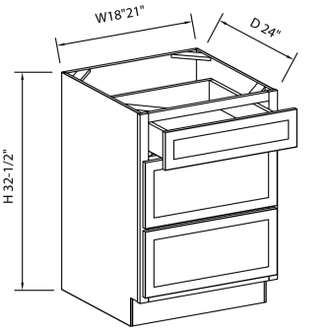

Lazy Susan Corner ADA Base

Lazy Susan Corner	
ADALS3612	36″

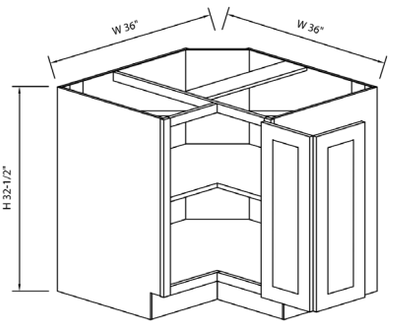

Blind Corner ADA Base

Blind Corner Base						
ADABBC36	Width	Door Opening	Center Stile	Full Door Width	Pull Min.	Pull Max.
	36″	12″	9″	14 9/16″	3″	9″

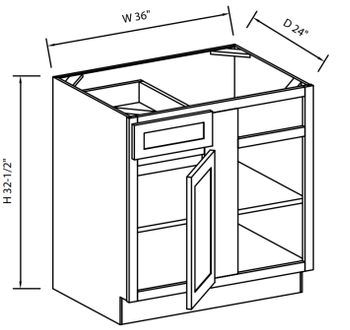

Double Doors & Drawers **ADA Base**

Double Drawer & Door	
ADAB30	30″
ADAB33	33″
ADAB36	36″
ADAB39	39″
ADAB42	42″
ADAB48	48″

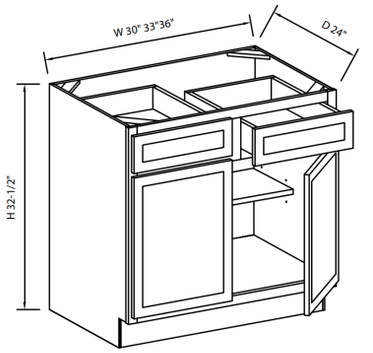

Vanity Sink **ADA Base**

Vanity Base Cabinet	
ADAV30	30 x 21
ADAV36	36 x 21

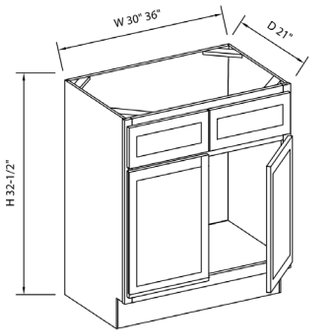

Double Door Vanity Sink **ADA Base**

Double Door Vanity	
ADAV4821DD	48 x 21

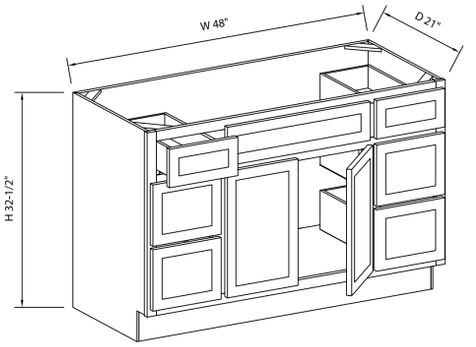

Item Style Availability

Item Code	Item Description	White Shaker	Platinum Shaker	Hickory Shaker	West Point Grey	Aspen White Shaker	Winchester Grey	Modern Black Shaker	Florence Sage	Cambridge Shaker
Wall Cabinets		WS	PS	HS	WP	ASP	WG	MBS	FS	CS
MW3030	Wall Microwave 2D 30"x 30" (pg. 9)	•	•	•	•	•	•	•	•	•
MW3036	Wall Microwave 2D 30"x 36" (pg. 9)	•	•	•	•	•	•	•	•	•
MW3042	Wall Microwave 2D 30"x 42" (pg. 9)	•	•	•	•	•	•	•	•	•
W0930	Wall Cab 1D 9" (pg. 7)	•	•	•	•	•	•	•	•	•
W0936	Wall Cab 1D 9" (pg. 7)	•	•	•	•	•	•	•	•	•
W0942	Wall Cab 1D 9" (pg. 7)	•	•	•	•	•	•	•	•	•
W1212PG	Wall Cab 1D Glass 12" x 12" (pg. 8)	•	•	•	•	•	•	•	•	•
W1230	Wall Cab 1D 12" x 30" (pg. 7)	•	•	•	•	•	•	•	•	•
W1236	Wall Cab 1D 12" x 36" (pg. 7)	•	•	•	•	•	•	•	•	•
W1242	Wall Cab 1D 12" x 42" (pg. 7)	•	•	•	•	•	•	•	•	•
W1512PG	Wall Cab 1D Glass 15" x 12" (pg. 8)	•	•	•	•	•	•	•	•	•
W1530	Wall Cab 1D 15" x 30" (pg. 7)	•	•	•	•	•	•	•	•	•
W1536	Wall Cab 1D 15" x 36" (pg. 7)	•	•	•	•	•	•	•	•	•
W1542	Wall Cab 1D 15" x 42" (pg. 7)	•	•	•	•	•	•	•	•	•
W1812PG	Wall Cab 1D Glass 18" x 12" (pg. 8)	•	•	•	•	•	•	•	•	•
W1830	Wall Cab 1D 18" x 30" (pg. 7)	•	•	•	•	•	•	•	•	•
W1836	Wall Cab 1D 18" x 36" (pg. 7)	•	•	•	•	•	•	•	•	•
W1842	Wall Cab 1D 18" x 42" (pg. 7)	•	•	•	•	•	•	•	•	•
W2112PG	Wall Cab 1D Glass 21" x 12" (pg. 8)	•	•	•	•	•	•	•	•	•
W3DR18	Wall Cab 3 Drawer 24" x 18" x 15" (pg. 9)	•	•	•	•	-	•	•	•	•
W3DR24	Wall Cab 3 Drawer 24" x 24" x 15" (pg. 9)	•	•	•	•	-	•	•	•	•
W2130	Wall Cab 1D 21" x 30" (pg. 7)	•	•	•	•	•	•	•	•	•
W2136	Wall Cab 1D 21" x 36" (pg. 7)	•	•	•	•	•	•	•	•	•
W2142	Wall Cab 1D 21" x 42" (pg. 7)	•	•	•	•	•	•	•	•	•
W2412PG	Wall Cab 2D Glass 24" x 12" (pg. 8)	•	•	•	•	•	•	•	•	•
W2430	Wall Cab 2D 24" x 30" (pg. 7)	•	•	•	•	•	•	•	•	•
W2436	Wall Cab 2D 24" x 36" (pg. 7)	•	•	•	•	•	•	•	•	•
W2442	Wall Cab 2D 24" x 42" (pg. 7)	•	•	•	•	•	•	•	•	•
W2712PG	Wall Cab 2D Glass 27" x 12" (pg. 8)	•	•	•	•	•	•	•	•	•
W2730	Wall Cab 2D 27" x 30" (pg. 7)	•	•	•	•	•	•	•	•	•
W2736	Wall Cab 2D 27" x 36" (pg. 7)	•	•	•	•	•	•	•	•	•
W2742	Wall Cab 2D 27" x 42" (pg. 7)	•	•	•	•	•	•	•	•	•
W3012	Wall Cab 2D 30" x 12" (pg. 7)	•	•	•	•	•	•	•	•	•
W3012PG	Wall Cab 2D Glass 30" x 12" (pg. 8)	•	•	•	•	•	•	•	•	•
W3015	Wall Cab 2D 30" x 15" (pg. 8)	•	•	•	•	•	•	•	•	•
W3018	Wall Cab 2D 30" x 18" (pg. 8)	•	•	•	•	•	•	•	•	•
W3021	Wall Cab 2D 30" x 21" (pg. 8)	•	•	•	•	•	•	•	•	•

Item Code	Item Description	White Shaker	Platinum Shaker	Hickory Shaker	West Point Grey	Aspen White Shaker	Winchester Grey	Modern Black Shaker	Florence Sage	Cambridge Shaker
Wall Cabinets		WS	PS	HS	WP	ASP	WG	MBS	FS	CS
W3024	Wall Cab 2D 30” x 24” (pg. 8)	•	•	•	•	•	•	•	•	•
W3030	Wall Cab 2D 30” x 30” (pg. 7)	•	•	•	•	•	•	•	•	•
W3036	Wall Cab 2D 30” x 36” (pg. 7)	•	•	•	•	•	•	•	•	•
W3042	Wall Cab 2D 30” x 42” (pg. 7)	•	•	•	•	•	•	•	•	•
W3312	Wall Cab 2D 33” x 12” (pg. 8)	•	•	•	•	•	•	•	•	•
W3312PG	Wall Cab 2D Glass 33” x 12” (pg. 8)	•	•	•	•	•	•	•	•	•
W3315	Wall Cab 2D 30” x 15” (pg. 8)	•	•	•	•	•	•	•	•	•
W3318	Wall Cab 2D 30” x 18” (pg. 8)	•	•	•	•	•	•	•	•	•
W3321	Wall Cab 2D 30” x 21” (pg. 8)	•	•	•	•	•	•	•	•	•
W3324	Wall Cab 2D 30” x 24” (pg. 8)	•	•	•	•	•	•	•	•	•
W3330	Wall Cab 2D 30” x 30” (pg. 7)	•	•	•	•	•	•	•	•	•
W3336	Wall Cab 2D 30” x 36” (pg. 7)	•	•	•	•	•	•	•	•	•
W3342	Wall Cab 2D 30” x 42” (pg. 7)	•	•	•	•	•	•	•	•	•
W3612	Wall Cab 2D 36” x 12” (pg. 8)	•	•	•	•	•	•	•	•	•
W3612PG	Wall Cab 2D Glass 36” x 12” (pg. 8)	•	•	•	•	•	•	•	•	•
W3615	Wall Cab 2D 36” x 15” (pg. 8)	•	•	•	•	•	•	•	•	•
W3618	Wall Cab 2D 36” x 18” (pg. 8)	•	•	•	•	•	•	•	•	•
W3621	Wall Cab 2D 36” x 21” (pg. 7)	•	•	•	•	•	•	•	•	•
W3624	Wall Cab 2D 36” x 24”	•	•	•	•	•	•	•	•	•
W3630	Wall Cab 2D 36” x 30” (pg. 7)	•	•	•	•	•	•	•	•	•
W3636	Wall Cab 2D 36” x 36” (pg. 7)	•	•	•	•	•	•	•	•	•
W3642	Wall Cab 2D 36” x 42” (pg. 7)	•	•	•	•	•	•	•	•	•
W3930	Wall Cab 2D 39” x 30” (pg. 7)	•	•	•	•	•	•	•	•	•
W3936	Wall Cab 2D 39” x 36” (pg. 7)	•	•	•	•	•	•	•	•	•
W3942	Wall Cab 2D 39” x 42” (pg. 7)	•	•	•	•	•	•	•	•	•
W4230	Wall Cab 2D 42” x 30” (pg. 7)	•	•	•	•	•	•	•	•	•
W4236	Wall Cab 2D 30” x 42” (pg. 7)	•	•	•	•	•	•	•	•	•
W4242	Wall Cab 2D 42” x 42” (pg. 7)	•	•	•	•	•	•	•	•	•
W243024	Upper Utility Cab 24” x 30” x 24” (pg. 14)	•	•	•	•	-	•	•	•	•
W243624	Upper Utility Cab 24” x 36” x 24” (pg. 14)	•	•	•	•	-	•	•	•	•
W244224	Upper Utility Cab 24” x 42” x 24” (pg. 14)	•	•	•	•	-	•	•	•	•
W303024	Upper Utility Cab 30” x 30” x 24” (pg. 14)	•	•	•	•	-	•	•	•	•
W303624	Upper Utility Cab 30” x 36” x 24” (pg. 14)	•	•	•	•	-	•	•	•	•
W304224	Upper Utility Cab 30” x 42” x 24” (pg. 14)	•	•	•	•	-	•	•	•	•
W363024	Upper Utility Cab 36” x 36” x 24” (pg. 14)	•	•	•	•	-	•	•	•	•
W363624	Upper Utility Cab 36” x 36” x 24” (pg. 14)	•	•	•	•	-	•	•	•	•
W364224	Upper Utility Cab 36” x 42” x 24” (pg. 14)	•	•	•	•	-	•	•	•	•

Item Code	Item Description	White Shaker	Platinum Shaker	Hickory Shaker	West Point Grey	Aspen White Shaker	Winchester Grey	Modern Black Shaker	Florence Sage	Cambridge Shaker
Wall Cabinets		WS	PS	HS	WP	ASP	WG	MBS	FS	CS
WBC2730	Blind Corner Wall Cab 1D 27” x 30” (pg. 9)	•	•	•	•	•	•	•	•	•
WBC2736	Blind Corner Wall Cab 1D 27” x 36” (pg. 9)	•	•	•	•	•	•	•	•	•
WBC2742	Blind Corner Wall Cab 1D 27” x 42” (pg. 9)	•	•	•	•	•	•	•	•	•
WCA1230	Wall End Angle Cab 1D 12” x 30” (pg. 9)	•	•	•	•	•	•	•	•	•
WCA1236	Wall End Angle Cab 1D 12” x 36” (pg. 9)	•	•	•	•	•	•	•	•	•
WCA1242	Wall End Angle Cab 11D 2” x 42” (pg. 9)	•	•	•	•	•	•	•	•	•
WDC2430	Diagonal Corner Wall Cab 1D 24” x 30” (pg. 8)	•	•	•	•	•	•	•	•	•
WDC2436	Diagonal Corner Wall Cab 1D 24” x 36” (pg. 8)	•	•	•	•	•	•	•	•	•
WDC2442	Diagonal Corner Wall Cab 1D 24” x 42” (pg. 8)	•	•	•	•	•	•	•	•	•
WDC42PG	Diagonal Corner Wall Cab 1D Glass 24” x 42” (pg. 8)	•	•	•	•	•	•	•	•	•
WR3315	Refrigerator Wall Cab 2D 33” x 15” x 24” (pg. 7)	•	•	•	•	•	•	•	•	•
WR3324	Refrigerator Wall Cab 2D 33” x 24” x 24” (pg. 7)	•	•	•	•	•	•	•	•	•
WR3612	Refrigerator Wall Cab 2D 33” x 15” x 24” (pg. 7)	•	•	•	•	•	•	•	•	•
WR3615	Refrigerator Wall Cab 2D 33” x 15” x 24” (pg. 7)	•	•	•	•	•	•	•	•	•
WR3618	Refrigerator Wall Cab 2D 33” x 15” x 24” (pg. 7)	•	•	•	•	•	•	•	•	•
WR3621	Refrigerator Wall Cab 2D 33” x 15” x 24” (pg. 7)	•	•	•	•	•	•	•	•	•
WR3624	Refrigerator Wall Cab 2D 33” x 15” x 24” (pg. 7)	•	•	•	•	•	•	•	•	•
WSC30	Wall Spice Cab 5DR 6” x 30” (pg. 7)	•	•	•	•	•	•	•	•	•
WER2430	Wall Easy Reach Cab 24” x 30” (pg. 8)	•	•	•	•	-	•	•	•	•
WER2436	Wall Easy Reach Cab 24” x 36” (pg. 8)	•	•	•	•	-	•	•	•	•
WER2442	Wall Easy Reach Cab 24” x 42” (pg. 8)	•	•	•	•	-	•	•	•	•
DDSWOC3312	Double Door Stacker Wall Oven Cab 33” x 12” (pg. 8)	•	•	•	•	-	•	•	•	•
DDSWDC2412	Double Door Stacker Wall Diagonal Cab 24” x 12” (pg. 9)	•	•	•	•	-	•	•	•	•

Wall Cabinet Accessories										
TT2436	Toilet Topper 24” x 36” x 8” (pg. 18)	•	•	•	•	-	•	•	•	•
WSC1515	Wine Storage Cube 15” x 15” (pg. 16)	•	•	•	•	-	•	•	•	•
WSC1818	Wine Storage Cube 18” x 18” (pg. 18)	•	•	•	•	-	•	•	•	•
LWR3015	Lattice Wine Rack 15” x 30” (pg. 15)	•	•	•	•	•	•	•	•	•

Item Code	Item Description	White Shaker	Platinum Shaker	Hickory Shaker	West Point Grey	Aspen White Shaker	Winchester Grey	Modern Black Shaker	Florence Sage	Cambridge Shaker
Base Cabinets		WS	PS	HS	WP	ASP	WG	MBS	FS	CS
B12	Base Cab 1DR 1D 12" (pg. 10)	•	•	•	•	•	•	•	•	•
B15	Base Cab 1DR 1D 15" (pg. 10)	•	•	•	•	•	•	•	•	•
B18	Base Cab 1DR 1D 18" (pg. 10)	•	•	•	•	•	•	•	•	•
B21	Base Cab 1DR 1D 21" (pg. 10)	•	•	•	•	•	•	•	•	•
B24	Base Cab 1DR 1D 24" (pg. 10)	•	•	•	•	•	•	•	•	•
B27	Base Cab 1DR 1D 27" (pg. 10)	•	•	•	•	•	•	•	•	•
B30	Base Cab 1DR 1D 30" (pg. 10)	•	•	•	•	•	•	•	•	•
B33	Base Cab 1DR 1D 33" (pg. 10)	•	•	•	•	•	•	•	•	•
B36	Base Cab 1DR 1D 36" (pg. 10)	•	•	•	•	•	•	•	•	•
B39	Base Cab 1DR 1D 39" (pg. 10)	•	•	•	•	•	•	•	•	•
B42	Base Cab 1DR 1D 42" (pg. 10)	•	•	•	•	•	•	•	•	•
B48	Base Cab 1DR 1D 48" (pg. 10)	•	•	•	•	•	•	•	•	•
BER33	Base Easy Reach 33" (pg. 11)	•	•	•	•	-	•	•	•	•
BER36	Base Easy Reach 36" (pg. 11)	•	•	•	•	-	•	•	•	•
2DB24	Base Cab 2DR 24" (pg. 11)	•	•	•	•	-	•	•	•	•
2DB27	Base Cab 2DR 27" (pg. 11)	•	•	•	•	-	•	•	•	•
2DB30	Base Cab 2DR 30" (pg. 11)	•	•	•	•	-	•	•	•	•
2DB33	Base Cab 2DR 33" (pg. 11)	•	•	•	•	-	•	•	•	•
2DB36	Base Cab 2DR 36" (pg. 11)	•	•	•	•	-	•	•	•	•
B48	Base Cab 2DR 2D 48" (pg. 10)	•	•	•	•	•	•	•	•	•
BA24	Base End Angle Cab 2D 24" x 24" (pg. 12)	•	•	•	•	•	•	•	•	•
BBC36	Blind Corner Base 1DR 1D 24" x 36" (pg. 12)	•	•	•	•	•	•	•	•	•
BMC27	Base Microwave Cab 27" (pg. 12)	•	•	•	•	•	•	•	•	•
BMC30	Base Microwave Cab 30" (pg. 12)	•	•	•	•	•	•	•	•	•
BSD6	Base Spice Drawer Cab 5DR 6" (pg. 13)	•	•	•	•	•	•	•	•	•
BSR9	Base Spice Rack 9" (pg. 13)	•	•	•	•	-	•	•	•	•
BSR12	Base Spice Rack 12" (pg. 13)	•	•	•	•	-	•	•	•	•
CDB36	Corner Base Cab 3DR 36" (pg. 10)	•	•	•	•	•	•	•	•	•
DB12	Drawer Base Cab 3DR 12" (pg. 10)	•	•	•	•	•	•	•	•	•
DB15	Drawer Base Cab 3DR 15" (pg. 10)	•	•	•	•	•	•	•	•	•
DB18	Drawer Base Cab 3DR 18" (pg. 10)	•	•	•	•	•	•	•	•	•
DB21	Drawer Base Cab 3DR 21" (pg. 10)	•	•	•	•	•	•	•	•	•
DB24	Drawer Base Cab 3DR 24" (pg. 10)	•	•	•	•	•	•	•	•	•
DB30	Drawer Base Cab 3DR 30" (pg. 10)	•	•	•	•	•	•	•	•	•

Item Code	Item Description	White Shaker	Platinum Shaker	Hickory Shaker	West Point Grey	Aspen White Shaker	Winchester Grey	Modern Black Shaker	Florence Sage	Cambridge Shaker
Base Cabinets		WS	PS	HS	WP	ASP	WG	MBS	FS	CS
DB36	Drawer Base Cab 3DR 36" (pg. 10)	•	•	•	•	•	•	•	•	•
DCSB36	Diagonal Corner Sink Base 1F 1D 36" (pg. 11)	•	•	•	•	•	•	•	•	•
FSB36	Farm Sink Base 2D 36" (pg. 11)	•	•	•	•	•	•	•	•	•
FHB12	Single Door Full Height Base Cab (pg. 12)	•	-	-	-	-	-	•	•	•
FHB15	Single Door Full Height Base Cab (pg. 12)	•	-	-	-	-	-	•	•	•
FHB18	Single Door Full Height Base Cab (pg. 12)	•	-	-	-	-	-	•	•	•
FHB21	Single Door Full Height Base Cab (pg. 12)	•	-	-	-	-	-	•	•	•
FHB24	Double Door Full Height Base Cab (pg. 12)	•	-	-	-	-	-	•	•	•
FHB27	Double Door Full Height Base Cab (pg. 12)	•	-	-	-	-	-	•	•	•
FHB30	Double Door Full Height Base Cab (pg. 12)	•	-	-	-	-	-	•	•	•
FHB33	Double Door Full Height Base Cab (pg. 12)	•	-	-	-	-	-	•	•	•
FHB36	Double Door Full Height Base Cab (pg. 12)	•	-	-	-	-	-	•	•	•
FHB39	Double Door Full Height Base Cab (pg. 12)	•	-	-	-	-	-	•	•	•
FHB42	Double Door Full Height Base Cab (pg. 12)	•	-	-	-	-	-	•	•	•
FHB48	Double Door Full Height Base Cab (pg. 12)	•	-	-	-	-	-	•	•	•
LS3312	Lazy Susan Corner Base 2D 33" (pg. 12)	•	•	•	•	•	•	•	•	•
LS3612	Lazy Susan Corner Base 2D 36" (pg. 12)	•	•	•	•	•	•	•	•	•
SB33	Sink Base 2F 2D 33" (pg. 11)	•	•	•	•	•	•	•	•	•
SB36	Sink Base 2F 2D 36" (pg. 11)	•	•	•	•	•	•	•	•	•
TB09	Tray Base 9" (pg. 13)	•	•	•	•	•	•	•	•	•
UCB1854	Bottom Utility Cab 18" x 54" (pg. 13)	•	•	•	•	-	•	•	•	•
UCB2454	Bottom Utility Cab 24" x 54" (pg. 13)	•	•	•	•	-	•	•	•	•
UCB3054	Bottom Utility Cab 30" x 54" (pg. 14)	•	•	•	•	-	•	•	•	•
UCB3654	Bottom Utility Cab 36" x 54" (pg. 14)	•	•	•	•	-	•	•	•	•
Utility Cabinets										
UC1884	Utility Cab 2D 18" x 84" (pg. 13)	•	•	•	•	•	•	•	•	•
UC1890	Utility Cab 2D 18" x 90" (pg. 13)	•	•	•	•	•	•	•	•	•
UC1896	Utility Cab 2D 18" x 96" (pg. 13)	•	•	•	•	•	•	•	•	•
UC2484	Utility Cab 4D 24" x 84" (pg. 13)	•	•	•	•	•	•	•	•	•
UC2490	Utility Cab 4D 24" x 90" (pg. 13)	•	•	•	•	•	•	•	•	•
UC2496	Utility Cab 4D 24" x 96" (pg. 13)	•	•	•	•	•	•	•	•	•
UOC3384	Universal Oven Cab 3DR 2D 33" x 84" (pg. 13)	•	•	•	•	•	•	•	•	•
UOC3390	Universal Oven Cab 3DR 2D 33" x 90" (pg. 13)	•	•	•	•	•	•	•	•	•
UOC3396	Universal Oven Cab 3DR 2D 33" x 96" (pg. 13)	•	•	•	•	•	•	•	•	•

Item Code	Item Description	White Shaker	Platinum Shaker	Hickory Shaker	West Point Grey	Aspen White Shaker	Winchester Grey	Modern Black Shaker	Florence Sage	Cambridge Shaker
Cabinet Accessories		WS	PS	HS	WP	ASP	WG	MBS	FS	CS
AG2418	Appliance Garage 1D (pg. 18)	•	•	•	•	•	•	•	•	•
CBLPN2	Small Corbel 4¾" x 5" x 9½" (pg. 16)	•	•	•	•	•	•	•	•	•
CBLPN3	Large Corbel 6¼" x 6½" x 13¼" (pg. 16)	•	•	•	•	•	•	•	•	•
LWR3015	Lattice Wine Rack 15" x 30" (pg. 15)	•	•	•	•	•	•	•	•	•
FFS24	Finished Floating Shelf 2½" x 10" x 24" (pg. 15)	•	•	•	•	-	•	•	•	•
FFS30	Finished Floating Shelf 2½" x 10" x 30" (pg. 15)	•	•	•	•	-	•	•	•	•
FFS36	Finished Floating Shelf 2½" x 10" x 36" (pg. 15)	•	•	•	•	-	•	•	•	•
FFS42	Finished Floating Shelf 2½" x 10" x 42" (pg. 15)	•	•	•	•	-	•	•	•	•
MD1530	Mullion Glass Door for W1530 15" x 30" (pg. 17)	•	•	-	-	-	-	•	•	•
MD1536	Mullion Glass Door for W1536 15" x 36" (pg. 17)	•	•	-	-	-	-	•	•	•
MD1542	Mullion Glass Door for W1542 15" x 42" (pg. 17)	•	•	-	-	-	-	•	•	•
MD1830	Mullion Glass Door for W1830 18" x 30" (pg. 17)	•	•	-	-	-	-	•	•	•
MD1836	Mullion Glass Door for W1830 18" x 36" (pg. 17)	•	•	-	-	-	-	•	•	•
MD1842	Mullion Glass Door for W1842 18" x 42" (pg. 17)	•	•	-	-	-	-	•	•	•
MD2130	Mullion Glass Door for W2130 21" x 30" (pg. 17)	•	•	-	-	-	-	•	•	•
MD2136	Mullion Glass Door for W2136 21" x 36" (pg. 17)	•	•	-	-	-	-	•	•	•
MD2142	Mullion Glass Door for W2142 21" x 42" (pg. 17)	•	•	-	-	-	-	•	•	•
MD2430	Mullion Glass Door for W2430 24" x 30" (pg. 17)	•	•	-	-	-	-	•	•	•
MD2436	Mullion Glass Door for W2436 24" x 36" (pg. 17)	•	•	-	-	-	-	•	•	•
MD2442	Mullion Glass Door for W2442 24" x 42" (pg. 17)	•	•	-	-	-	-	•	•	•
MD3030	Mullion Glass Door for W3030 30" x 30" (pg. 17)	•	•	-	-	-	-	•	•	•
MD3036	Mullion Glass Door for W3036 30" x 36" (pg. 17)	•	•	-	-	-	-	•	•	•
MD3042	Mullion Glass Door for W3042 30" x 42" (pg. 17)	•	•	-	-	-	-	•	•	•
MD3630	Mullion Glass Door for W3630 36" x 30" (pg. 17)	•	•	-	-	-	-	•	•	•
MD3636	Mullion Glass Door for W3636 26" x 36" (pg. 17)	•	•	-	-	-	-	•	•	•
MD3642	Mullion Glass Door for W3642 36" x 42" (pg. 17)	•	•	-	-	-	-	•	•	•
MDWDC30	Mullion Glass Door for WDC2430 24" x 30" (pg. 17)	•	•	-	-	-	-	•	•	•
MDWDC36	Mullion Glass Door for WDC2436 24" x 36" (pg. 17)	•	•	-	-	-	-	•	•	•
MDWDC42	Mullion Glass Door for WDC2442 24" x 42" (pg. 17)	•	•	-	-	-	-	•	•	•

Item Code	Item Description	White Shaker	Platinum Shaker	Hickory Shaker	West Point Grey	Aspen White Shaker	Winchester Grey	Modern Black Shaker	Florence Sage	Cambridge Shaker
Cabinet Accessories		WS	PS	HS	WP	ASP	WG	MBS	FS	CS
PG1530	Plain Glass Door for W1530 15" x 30" (pg. 17)	•	•	•	•	-	•	•	•	•
PG1536	Plain Glass Door for W1536 15" x 36" (pg. 17)	•	•	•	•	-	•	•	•	•
PG1542	Plain Glass Door for W1542 15" x 42" (pg. 17)	•	•	•	•	-	•	•	•	•
PG1830	Plain Glass Door for W1830 18" x 30" (pg. 17)	•	•	•	•	-	•	•	•	•
PG1836	Plain Glass Door for W1836 18" x 36" (pg. 17)	•	•	•	•	-	•	•	•	•
PG1842	Plain Glass Door for W1842 18" x 42" (pg. 17)	•	•	•	•	-	•	•	•	•
PG2130	Plain Glass Door for W2130 21" x 30" (pg. 17)	•	•	•	•	-	•	•	•	•
PG2136	Plain Glass Door for W2136 21" x 36" (pg. 17)	•	•	•	•	-	•	•	•	•
PG2142	Plain Glass Door for W2142 21" x 42" (pg. 17)	•	•	•	•	-	•	•	•	•
PG2430	Plain Glass Door for W2430 24" x 30" (pg. 17)	•	•	•	•	-	•	•	•	•
PG2436	Plain Glass Door for W2436 24" x 36" (pg. 17)	•	•	•	•	-	•	•	•	•
PG2442	Plain Glass Door for W2442 24" x 42" (pg. 17)	•	•	•	•	-	•	•	•	•
PG3030	Plain Glass Door for W3030 30" x 30" (pg. 17)	•	•	•	•	-	•	•	•	•
PG3036	Plain Glass Door for W3036 30" x 36" (pg. 17)	•	•	•	•	-	•	•	•	•
PG3042	Plain Glass Door for W3042 30" x 42" (pg. 17)	•	•	•	•	-	•	•	•	•
PG3630	Plain Glass Door for W3630 36" x 30" (pg. 17)	•	•	•	•	-	•	•	•	•
PG3636	Plain Glass Door for W3636 36" x 36" (pg. 17)	•	•	•	•	-	•	•	•	•
PG3642	Plain Glass Door for W3642 36" x 42" (pg. 17)	•	•	•	•	-	•	•	•	•
PGWDC30	Glass Door Set for WDC2430 24" x 30" (pg. 17)	•	•	•	•	•	•	•	•	•
PGWDC36	Glass Door Set for WDC2436 24" x 36" (pg. 17)	•	•	•	•	•	•	•	•	•
PGWDC42	Glass Door Set for WDC2442 24" x 42" (pg. 17)	•	•	•	•	•	•	•	•	•
PR3015	Wall Plate Rack 30" x 15" (pg. 16)	•	•	•	•	•	•	•	•	•
ROT15	Universal Roll Out Tray 15" (pg. 15)	•	•	•	•	•	•	•	•	•
ROT18	Universal Roll Out Tray 18" (pg. 15)	•	•	•	•	•	•	•	•	•
ROT21	Universal Roll Out Tray 21" (pg. 15)	•	•	•	•	•	•	•	•	•
ROT24	Universal Roll Out Tray 24" (pg. 15)	•	•	•	•	•	•	•	•	•
ROT27	Universal Roll Out Tray 27" (pg. 15)	•	•	•	•	•	•	•	•	•
ROT30	Universal Roll Out Tray 30" (pg. 15)	•	•	•	•	•	•	•	•	•
ROT33	Universal Roll Out Tray 33" (pg. 15)	•	•	•	•	•	•	•	•	•
ROT36	Universal Roll Out Tray 36" (pg. 15)	•	•	•	•	•	•	•	•	•
SGH	Wall Stem Glass Holder 12" x 30" (pg. 15)	•	•	•	•	•	•	•	•	•
TUK	Touch-Up Kit (pg. 23)	•	•	•	•	•	•	•	•	•
UCD30	Under Counter Knee Drawer 30" x 21" (pg. 16)	•	•	•	•	•	•	•	•	•
UCD36	Under Counter Knee Drawer 36" x 21" (pg. 16)	•	•	•	•	•	•	•	•	•
VA48	Arched Valance 4½" x 48" (pg. 15)	•	•	•	•	•	•	•	•	•
RWC-TCK-DOUBLE	Double Trash Can Pull Out 35QT (pg. 23)	•	•	•	•	•	•	•	•	•
RWC-TCK-SINGLE	Single Trash Can Pull Out 35QT (pg. 23)	•	•	•	•	•	•	•	•	•

Item Code	Item Description	White Shaker	Platinum Shaker	Hickory Shaker	West Point Grey	Aspen White Shaker	Winchester Grey	Modern Black Shaker	Florence Sage	Cambridge Shaker
Panels, Fillers, & Moulding		WS	PS	HS	WP	ASP	WG	MBS	FS	CS
BS2435	Base Skin Veneer Panel ¼" x 23¼" x 34½" (pg. 20)	-	•	•	-	-	•	-	-	-
BEP3	Base End Panel 24" x 34½" (pg. 20)	•	•	•	•	•	•	•	•	•
BF3	Base Filler 3" x 34½" (pg. 21)	•	•	•	•	•	•	•	•	•
BF6	Base Filler 6" x 34½" (pg. 21)	•	•	•	•	•	•	•	•	•
BFF3	Fluted Base Filler 3" x 34½" (pg. 21)	•	•	•	•	•	•	•	•	•
BFF6	Fluted Base Filler 6" x 34½" (pg. 21)	•	•	•	•	•	•	•	•	•
BM8	Batten Moulding 1-21/32" x 96" (pg. 23)	•	•	•	•	•	•	•	•	•
BBFBP4896	Bead Board 3/8" x 48" x 96" (pg. 20)	•	•	•	•	-	•	•	•	•
DEC004	Base Board Moulding 4½" x 96" (pg. 23)	•	•	•	•	•	•	•	•	•
DP1230	Decorative Panel 12" x 30" (pg. 20)	•	•	•	•	•	•	•	•	•
DP1236	Decorative Panel 12" x 36" (pg. 20)	•	•	•	•	•	•	•	•	•
DP1242	Decorative Panel 12" x 42" (pg. 20)	•	•	•	•	•	•	•	•	•
DP2430	Decorative Panel 24" x 30" (pg. 20)	•	•	•	•	•	•	•	•	•
IS3696	Island Panel 36" x 96" (pg. 20)	•	•	•	•	•	•	•	•	•
LCM8	Large Crown Moulding 2½" x 3-3/8" x 96" (pg. 22)	•	•	•	•	•	•	•	•	•
LRM8	Light Rail Moulding 1" x 1-7/19" x 96" (pg. 22)	•	•	•	•	•	•	•	•	•
LVC	Large Cove Crown Moulding 2½" x 96" (pg. 23)	•	•	•	•	•	•	•	•	•
MTEP84	Matching Tall End Panel 23¼" x 84" (pg. 20)	•	•	•	•	•	•	•	•	•
MTEP90	Matching Tall End Panel 23¼" x 90" (pg. 20)	•	•	•	•	•	•	•	•	•
MTEP96	Matching Tall End Panel 23¼" x 96" (pg. 20)	•	•	•	•	•	•	•	•	•
MVEPBH	Matching Vanity End Panel ¾" x 20¼" x 30" (pg. 20)	•	•	•	•	•	•	•	•	•
PLYEB42	Plywood Edgebanded 4E ¾" x 42" x 96" (pg. 20)	•	•	•	•	•	•	•	•	•
OCS8	Corner Moulding 1-3/16" x 96" (pg. 22)	•	•	•	•	•	•	•	•	•
QR8	Quarter Round Moulding ¾" x ¾" x 96"	•	•	•	•	•	•	•	•	•
REP9624	Refridgerator End Panel 24" x 96" (pg. 20)	•	•	•	•	•	•	•	•	•
ROPE8	Rope Moulding ¾" x 96" (pg. 22)	•	•	•	•	•	•	•	•	•
SHM8	Shoe Moulding ½" x ¾" x 96" (pg. 22)	•	•	•	•	•	•	•	•	•
SM8	Scribe Moulding ¼" x ¾"x 96" 9pg. 22)	•	•	•	•	•	•	•	•	•
SPW	Stained Plywood 36" x 96" (pg. 21)	•	•	•	•	•	•	•	•	•
TF396	Tall Filler 3" x 96" (pg. 21)	•	•	•	•	•	•	•	•	•
TFF396	Fluted Tall Filler 3" x 96" (pg. 21)	•	•	•	•	•	•	•	•	•
TK8	Toe Kick 4½" x 96" (pg. 22)	•	•	•	•	•	•	•	•	•
TS2496	Tall Skin ¼" x 23¼" x 96" (pg. 21)	-	-	•	-	-	•	-	-	-
WEP1542	Wall End Panel 15" x 42" (pg. 20)	•	•	•	•	•	•	•	•	•
WF342	Wall Filler 3" x 42" (pg. 21)	•	•	•	•	•	•	•	•	•
WF396	Wall Filler 3" x 96" (pg. 21)	•	•	•	•	•	•	•	•	•
WF696	Wall Filler 6" x 96" (pg. 21)	•	•	•	•	•	•	•	•	•

Item Code	Item Description	White Shaker	Platinum Shaker	Hickory Shaker	West Point Grey	Aspen White Shaker	Winchester Grey	Modern Black Shaker	Florence Sage	Cambridge Shaker
Panels, Fillers, & Moulding		WS	PS	HS	WP	ASP	WG	MBS	FS	CS
WF642	Wall Filler 6" x 42" (pg. 21)	•	•	•	•	•	•	•	•	•
WFF342	Fluted Wall Filler 3" x 42" (pg. 21)	•	•	•	•	-	•	•	•	•
WFF396	Fluted Wall Filler 3" x 96" (pg. 21)	•	•	•	•	-	•	•	•	•
WFF642	Fluted Wall Filler 6" x 42" (pg. 21)	•	•	•	•	-	•	•	•	•
WS1542	Wall Skin Panel 15" x 42" (pg. 21)	•	•	•	•	-	•	•	•	•
Vanity Cabinets										
VB12	Vanity 1F 1D 12" (pg. 19)	•	•	•	•	-	•	•	•	•
VB15	Vanity 1F 1D 15" (pg. 19)	•	•	•	•	-	•	•	•	•
VB18	Vanity 1F 1D 18" (pg. 19)	•	•	•	•	-	•	•	•	•
V2121	Vanity 1F 1D 21" (pg. 18)	•	•	•	•	•	•	•	•	•
V2421	Vanity 1F 1D 24" (pg. 18)	•	•	•	•	•	•	•	•	•
V2721	Vanity 1F 1D 27" (pg. 18)	•	•	•	•	•	•	•	•	•
V3021	Vanity 1F 1D 30" (pg. 18)	•	•	•	•	•	•	•	•	•
V3621	Vanity 1F 1D 36" (pg. 18)	•	•	•	•	•	•	•	•	•
V3021DL	Vanity 1F 2DR 1D Left (pg. 19)	•	•	•	•	•	•	•	•	•
V3021DR	Vanity 1F 2DR 1D Right (pg. 19)	•	•	•	•	•	•	•	•	•
V3621DL	Vanity 2F 2DR 1D Left (pg. 19)	•	•	•	•	•	•	•	•	•
V3621DR	Vanity 2F 2DR 1D Right (pg. 19)	•	•	•	•	•	•	•	•	•
V4221DL	Vanity 2D 2F 2DR Left (pg. 19)	•	•	•	•	•	•	•	•	•
V4221DR	Vanity 2D 2F 2DR Right (pg. 19)	•	•	•	•	•	•	•	•	•
V4821DD	Vanity 6DR 1F 2D (pg. 19)	•	•	•	•	•	•	•	•	•
V6021DD	Vanity 6DR 1F 2D (pg. 19)	•	•	•	•	•	•	•	•	•
VDB1221	Vanity 3 Drawer Base 12" (pg. 18)	•	•	•	•	•	•	•	•	•
VDB1521	Vanity 3 Drawer Base 15" (pg. 18)	•	•	•	•	•	•	•	•	•
VDB1821	Vanity 3 Drawer Base 18" (pg. 18)	•	•	•	•	•	•	•	•	•
VDB2121	Vanity 3 Drawer Base 21" (pg. 18)	•	•	•	•	•	•	•	•	•
VDB2421	Vanity 3 Drawer Base 24" (pg. 18)	•	•	•	•	•	•	•	•	•

Item Code	Item Description	White Shaker	Platinum Shaker	Hickory Shaker	West Point Grey	Aspen White Shaker	Winchester Grey	Modern Black Shaker	Florence Sage	Cambridge Shaker
ADA Cabinets		WS	PS	HS	WP	ASP	WG	MBS	FS	CS
ADAB12	ADA Single Door Drawer Base Cab 24" x 12" (pg. 25)	•	-	-	-	-	-	-	-	-
ADAB15	ADA Single Door Drawer Base Cab 24" x 15" (pg. 25)	•	-	-	-	-	-	-	-	-
ADAB18	ADA Single Door Drawer Base Cab 24" x 18" (pg. 25)	•	-	-	-	-	-	-	-	-
ADAB21	ADA Single Door Drawer Base Cab 24" x 21" (pg. 25)	•	-	-	-	-	-	-	-	-
ADAB24	ADA Single Door Drawer Base Cab 24" x 24" (pg. 25)	•	-	-	-	-	-	-	-	-
ADAB27	ADA Single Door Drawer Base Cab 24" x 27" (pg. 25)	•	-	-	-	-	-	-	-	-
ADAB30	ADA Single Door Drawer Base Cab 24" x 30" (pg. 25)	•	-	-	-	-	-	-	-	-
ADAB33	ADA Single Door Drawer Base Cab 24" x 33" (pg. 25)	•	-	-	-	-	-	-	-	-
ADAB36	ADA Single Door Drawer Base Cab 24" x 36" (pg. 25)	•	-	-	-	-	-	-	-	-
ADAB39	ADA Single Door Drawer Base Cab 24" x 39" (pg. 25)	•	-	-	-	-	-	-	-	-
ADAB42	ADA Single Door Drawer Base Cab 24" x 42" (pg. 25)	•	-	-	-	-	-	-	-	-
ADADB18	ADA Drawer	•	-	-	-	-	-	-	-	-
ADADB21	ADA Drawer	•	-	-	-	-	-	-	-	-
ADABBC36	ADA Blind Corner	•	-	-	-	-	-	-	-	-
ADASB36	ADA Sink Base Cabinet	•	-	-	-	-	-	-	-	-
ADALS3612	ADA Lazy Susan	•	-	-	-	-	-	-	-	-
ADAV3021	ADA Vanity Sink Base Cab	•	-	-	-	-	-	-	-	-
ADAV3621	ADA Vanity Sink Base Cab	•	-	-	-	-	-	-	-	-
ADAV4821DD	ADA DOuble Door Vanity Cab	•	-	-	-	-	-	-	-	-

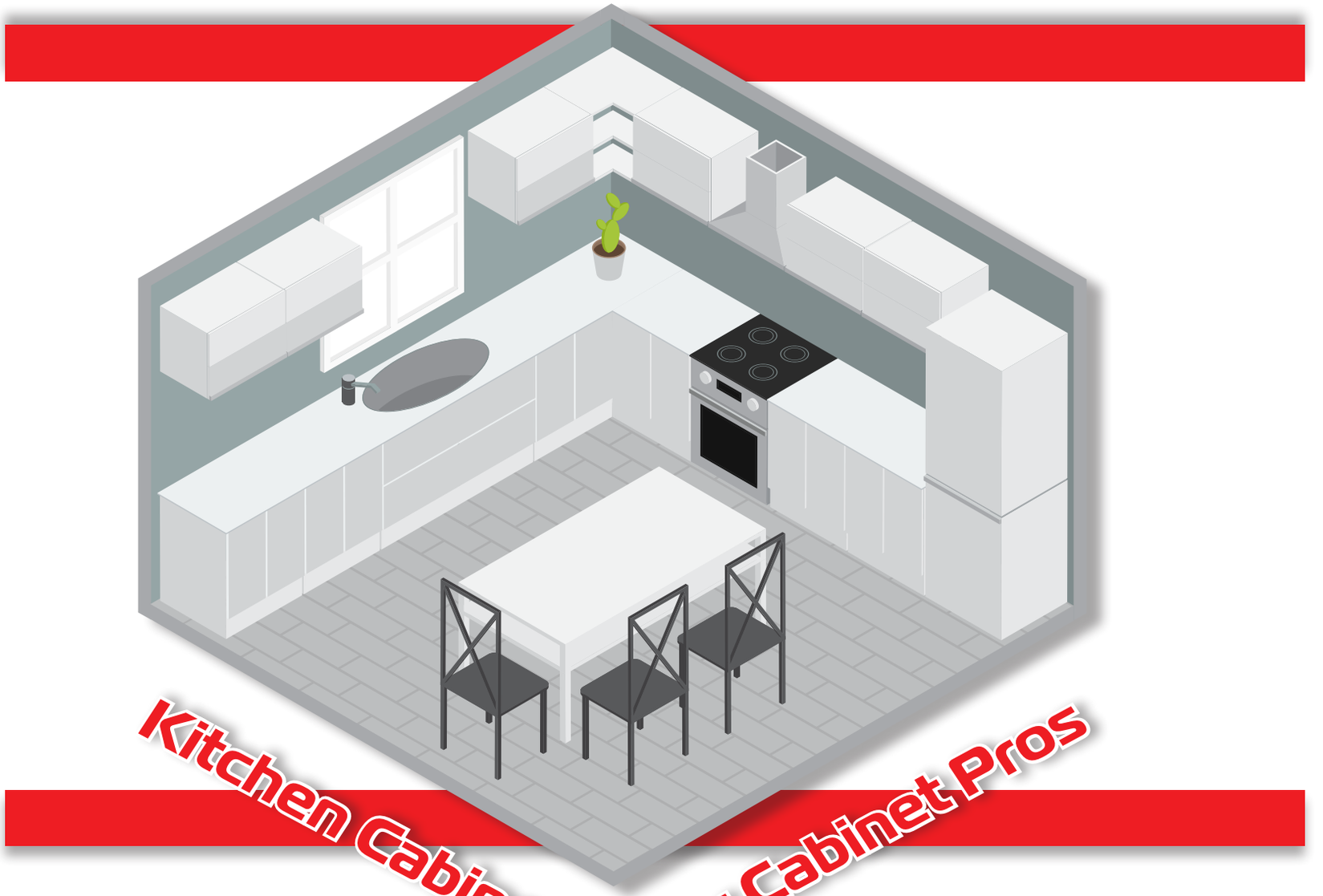

Kitchen Cabinetry For Cabinet Pros

kraftsmancabinetry.com
412-506-8688